API Ring Groove

Ring Max™ Inserts ..... RM 02-06

Ring Max™ II ..... RM 07-14

Ring Max™ III ..... RM 15-21

Ring Max™ Cartidges ..... RM 22-24

Ring Max™ STX ..... RM 25-29

Machining Methods Reference Guide ..... RM 30

Request Forms ..... RM 31

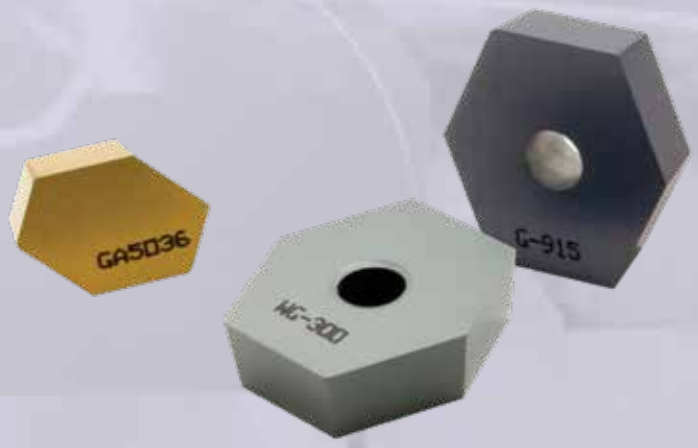

Phone: 814-763-2915 • 800-458-1850 • Fax: 814-763-4423 • sales@greenleafcorporation.com • www. greenleafcorporation.com

Ring Max™ Grooving Inserts

Greenleaf's Ring Max Grooving Inserts are a unique solution for machining API ring grooves and provide the capability of roughing and finishing in various materials. These inserts are specifically designed for use in Ring Max and will significantly increase productivity and savings.

Please contact Greenleaf Corporation for any questions or assistance.

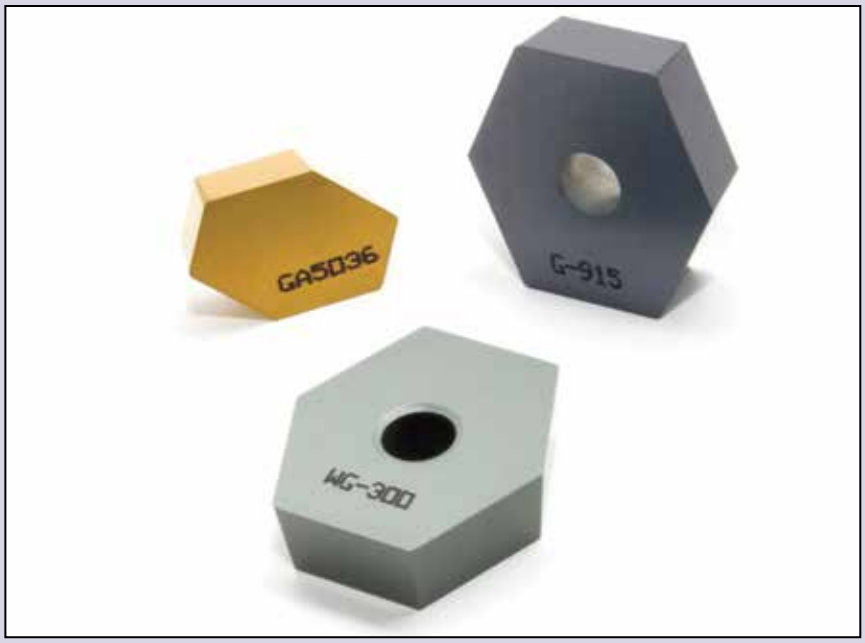

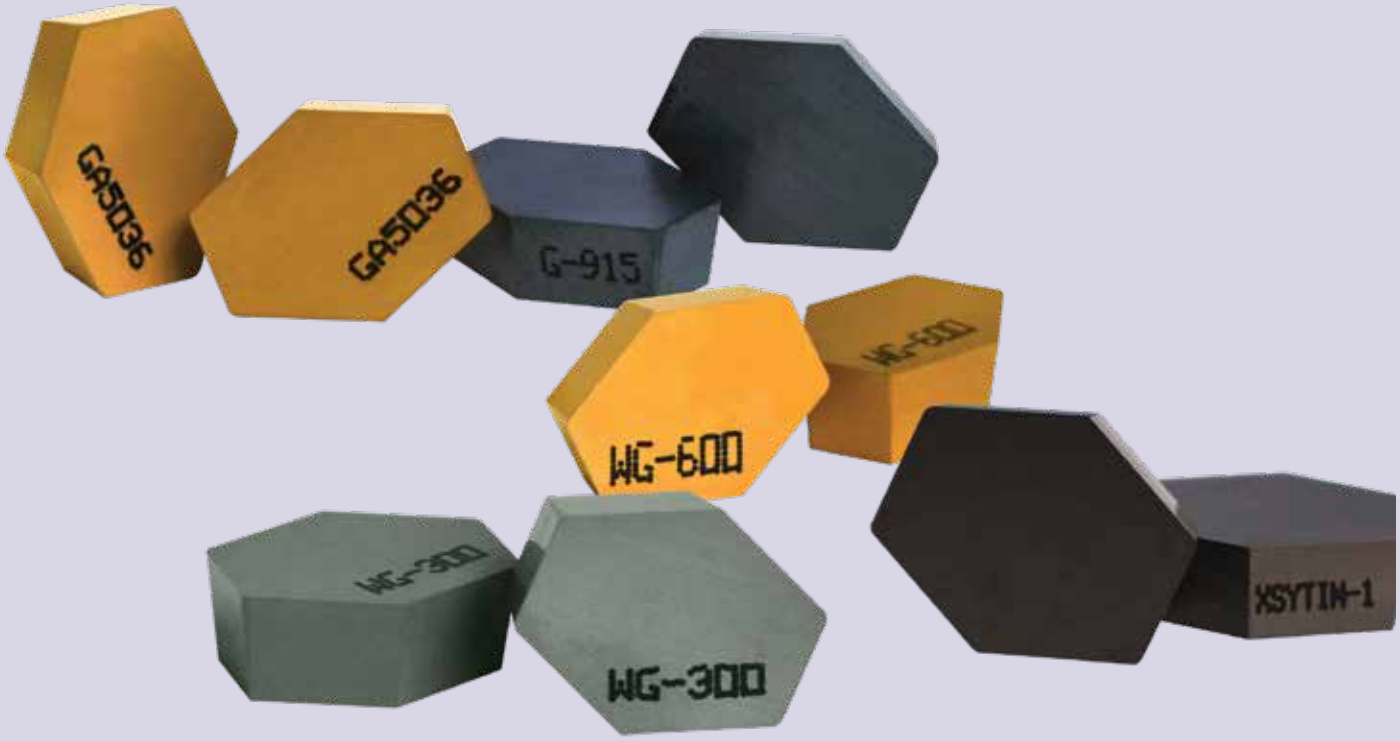

Phone: 814-763-2915 • 800-458-1850 • Fax: 814-763-4423 • sales@greenleafcorporation.com • www. greenleafcorporation.com

Ring Max™

Grooving Insert Identification System

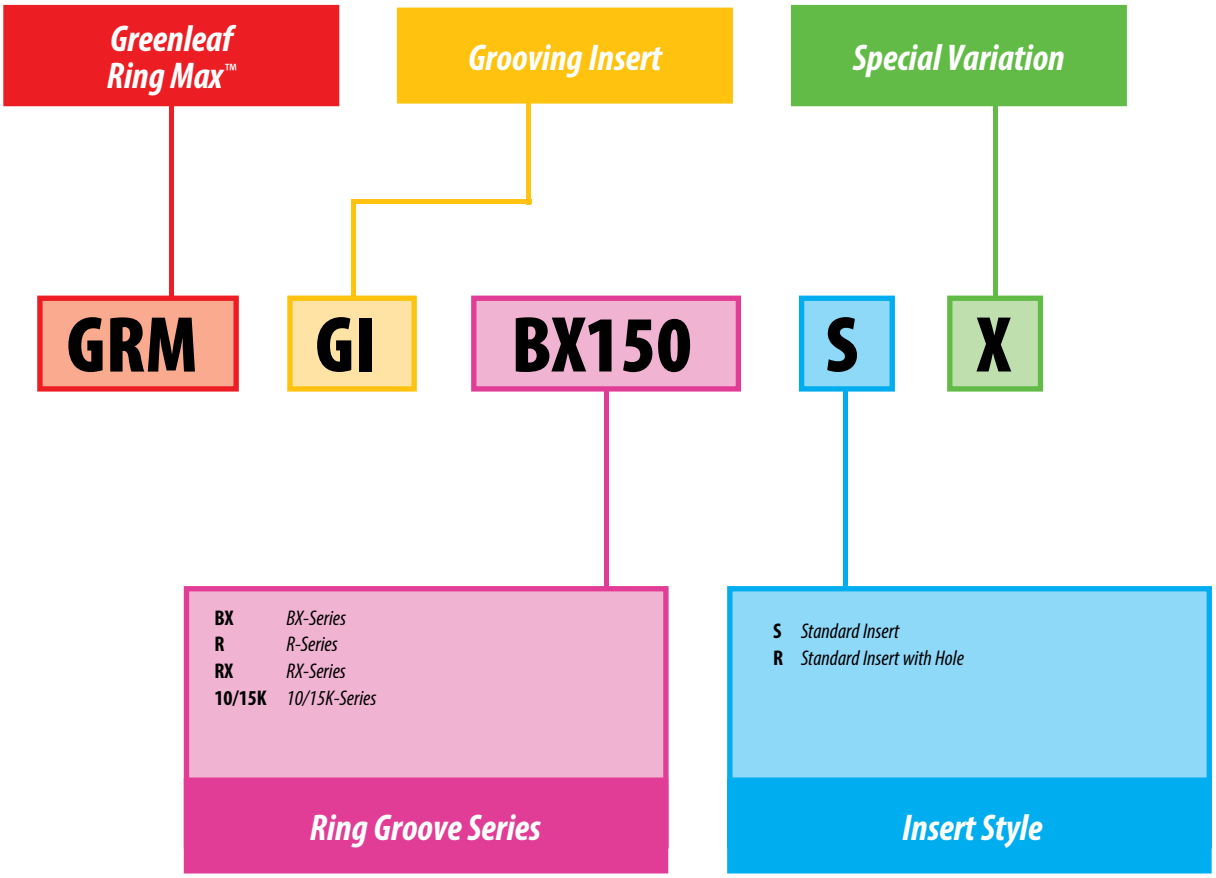

Phone: 814-763-2915 • 800-458-1850 • Fax: 814-763-4423 • sales@greenleafcorporation.com • www. greenleafcorporation.com

Insert Grades

Carbide

GA5036

A carbide grade that is best combined with the Ring Max for use in cast-steel applications, GA5036 has an advanced MT-CVD coating that promotes long tool life at high speeds.

G-915

Greenleaf's most versatile grade for machining API ring grooves, G-915 can easily machine most materials and works well on machines with low RPMs.

Ceramic

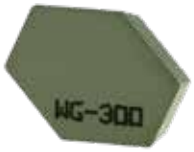

WG-300®

A whisker-reinforced Al_2O_3 ceramic that is very effective at machining high-temp alloy ring grooves, WG-300® offers increased removal rates up to 10 times higher than carbide.

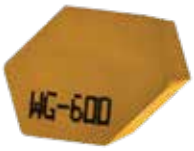

WG-600®

A coated whisker-reinforced Al_2O_3 ceramic that offers longer tool life and better performance over uncoated ceramics due to excellent thermal and wear resistance at very high surface speeds.

XSYTIN®-1

A phase-toughened ceramic for your most demanding applications, XSYTIN®-1 can run at lower RPMs and higher feed rates than any other ceramic grade and should be considered a first choice when machining rough weld overlay for API ring grooves.

Phone: 814-763-2915 • 800-458-1850 • Fax: 814-763-4423 • sales@greenleafcorporation.com • www. greenleafcorporation.com

Ring Max™ Inserts

GRM-GI

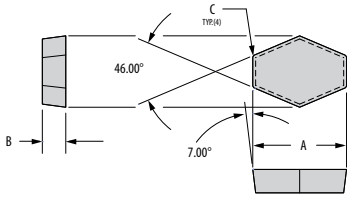

Insert	Part Number	Steel		Stainless Steel		Heat-Resistant Super Alloys				Dimensions (mm)		
		P		M		S						
		G-915	GA5035	WG-300	G-915	WG-300	WG-600	XSYTiN-1	G-915	A	B	C
	GRM-GI-BX150S	●	▲	◆	◆	●	◆	▲	▲	15,88	6,35	0,79
	GRM-GI-BX151S	●	▲	◆	◆	●	◆	▲	▲	15,88	6,35	0,79
	GRM-GI-BX152S	●	▲	◆	◆	●	◆	▲	▲	19,05	6,35	0,79
	GRM-GI-BX153S	●	▲	◆	◆	●	◆	▲	▲	19,05	6,35	0,79
	GRM-GI-BX154S	●	▲	◆	◆	●	◆	▲	▲	19,05	6,35	0,79
	GRM-GI-BX155R	●	▲	◆	◆	●	◆	▲	▲	22,23	6,35	0,79
	GRM-GI-BX156R	●	▲	◆	◆	●	◆	▲	▲	25,73	7,93	0,79
	GRM-GI-BX169R	●	▲	◆	◆	●	◆	▲	▲	25,40	6,35	0,79
	GRM-GI-RSET1-SX*	●	▲	◆	◆	●	◆	▲	▲	25,40	6,35	0,79
	GRM-GI-R46R	●	▲	◆	◆	●	◆	▲	▲	25,40	6,35	1,52
	GRM-GI-RSET2-SX*	●	▲	◆	◆	●	◆	▲	▲	15,88	3,96	0,79
	GRM-GI-RX201/5SX*	●	▲	◆	◆	●	◆	▲	▲	15,34	4,78	0,38
	GRM-GI-10K/15KSX*	●	▲	◆	◆	●	◆	▲	▲	15,88	6,35	0,76

CARBIDE COATINGS: MT-CVD Coated | PVD Coated | Uncoated

First Choice ◆ Second Choice ● Alternative ▲ Interrupted/Milling ❖

Grade descriptions — pages RM 05

CERAMIC CLASSIFICATION: Whisker Ceramic | Phase-Toughened | Silicon Nitride | Alumina TiC

** Denotes multiple groove sizes (See chart to below)*

NOTE: Depending on groove size, some Ring Max™ inserts may have a hole. All pre-clad groove inserts are designed and built to suit customer specifications.

NOTE: API groove specification GA/ISO-10423 is used for all finish inserts.

Group	Groove Size
R-SET1SX	R-21, R-23, R-24, R-26, R-27, R-30, R-31, R-34, R-35, R-37, R-39, R-41, R-44, R-45, R-49, R-53, R-57, R-61, R-65, R-69, R-82, R-84, R-99
R-SET2SX	R-12, R-13, R-14, R-15, R-16, R-17, R-18, R-19, R-20, R-22, R-25, R-29, R-33, R-36, R-40, R-43, R-48, R-52
10K/15KSX	10K-21/16", 10K-31/16", 15K-31/16"

Phone: 814-763-2915 • 800-458-1850 • Fax: 814-763-4423 • sales@greenleafcorporation.com • www. greenleafcorporation.com

Ring Max™ II Ring Groove Tooling

The Ring Max™ II cutters are designed to use fewer components for even greater dimensional accuracy and repeatability from groove to groove. Their unique design ensures accurate seating and secure locking of the insert cartridge into the cutter body.

Standard features and benefits include:

- Cutting of BX, R, and RX API ring grooves in Inconel 625 clad overlay in less than one minute!
- Machines the groove and chamfers in one operation.
- Adjustable and replaceable cartridge design for easy maintenance.

Please contact Greenleaf Corporation for any questions or assistance.

Phone: 814-763-2915 • 800-458-1850 • Fax: 814-763-4423 • sales@greenleafcorporation.com • www. greenleafcorporation.com

Ring Max™ II

Finishing Head Identification System

GRM2

- **Greenleaf Ring Max™**
- **Generation 2 Integral Shank**

BX150_

Ring Groove Size

BX-150	R-16	RX-201
BX-151	R-24	RX-205
BX-152	R-27	10K 2-1/16
BX-153	R-31	10K 3-1/16
BX-154	R-35	15K 3-1/16
BX-155	R-37	
BX-156	R-39	
BX-169	R-44	

NOTE: API specification GA/ISO-10423 groove size

Chamfer Designation

BLANK	*Finishing head with chamfer stations*
N	*No chamfer stations*
X	*Special variation*

NOTE: N or X variations denote special design and will be priced accordingly.

A50

Shank Type

A50	*CAT50/ANSI 50*
A40	*CAT40/ANSI 40*
N50	*NMTB-50*
N40	*NMTB-40*
BT50	*BT-50*
BT40	*BT-40*
MN50	*DIN 2080-A 50*
D50	*DIN 69871-A 50*
H100	*HSK-100*
C8	*CAPTO C-8*

Phone: 814-763-2915 • 800-458-1850 • Fax: 814-763-4423 • sales@greenleafcorporation.com • www. greenleafcorporation.com

Pictorial & Reference Index

Ring Max™ II Tooling

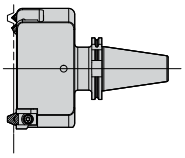

BX Series
page: RM 10

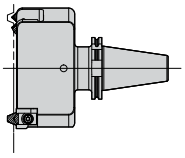

R Series
page: RM 11

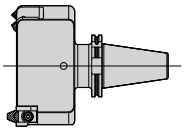

RX Series
page: RM 12

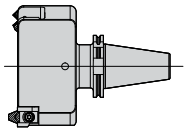

10K and 15K Series
page: RM 12

Reference

Ring Max™ II
Models
page: RM 13

Ring Max™ II Pre-Clad
Models
page: RM 14

Machining Methods
Reference Guide
page: RM 30

Special Toolchanger Clearance
Request Form
page: RM 31

Pre-Clad Head
Quote Request Form
page: RM 31

Phone: 814-763-2915 • 800-458-1850 • Fax: 814-763-4423 • sales@greenleafcorporation.com • www. greenleafcorporation.com

Ring Max™ II

BX Series

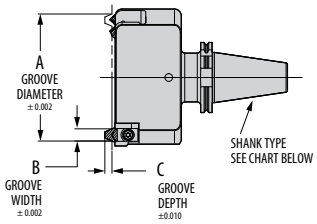

Part Number		Dimensions (mm)			Standard Components		Inserts	
Groove Series - Shank Type*	Stock	A	B	C	Grooving Cartidge	Chamfer Cartidge	Grooving Insert	Chamfer Insert
GRM2-BX150-_ _ _ _	See chart below for stocked sizes.	73,53	11,48	5,84	GRM-GC-BX-150	GRMCC01	GRM-GI-BX150S	SPGN-322
GRM2-BX151-_ _ _ _		77,83	11,89	5,84	GRM-GC-BX-151	GRMCC01	GRM-GI-BX151S	SPGN-322
GRM2-BX152-_ _ _ _		86,28	12,70	6,10	GRM-GC-BX-152	GRMCC01	GRM-GI-BX152S	SPGN-322
GRM2-BX153-_ _ _ _		102,82	14,12	7,11	GRM-GC-BX-153	GRMCC01	GRM-GI-BX153S	SPGN-322
GRM2-BX154-_ _ _ _		119,05	15,44	7,87	GRM-GC-BX-154	GRMCC01	GRM-GI-BX154S	SPGN-322
GRM2-BX155-_ _ _ _		150,67	17,78	8,64	GRM-GC-BX-155	GRMCC01	GRM-GI-BX155R	SPGN-322
GRM2-BX156-_ _ _ _		241,88	23,44	11,43	GRM-GC-BX-156	GRMCC01	GRM-GI-BX156R	SPGN-322
GRM2-BX169-_ _ _ _		176,71	16,97	9,91	GRM-GC-BX-169	GRMCC01	GRM-GI-BX169R	SPGN-322

** See chart to below*

Shank Description	Ordering Code
CAT50/ANSI 50	A50
CAT40/ANSI 40	A40
NMTB-50	N50
NMTB-40	N40
BT-50	BT50
BT-40	BT40
DIN 2080-A 50	MN50
DIN 69871-A 50	D50
HSK-100	H100
CAPTO C-8	C8

Stocked Sizes	
GRM2-BX150-A50	GRM2-BX154-A40
GRM2-BX150-BT50	GRM2-BX154-A50
GRM2-BX150-D50	GRM2-BX154-BT50
GRM2-BX151-A50	GRM2-BX154-D50
GRM2-BX151-BT50	GRM2-BX155-A40
GRM2-BX151-D50	GRM2-BX155-A50
GRM2-BX152-A40	GRM2-BX155-BT50
GRM2-BX152-A50	GRM2-BX155-D50
GRM2-BX152-BT50	GRM2-BX156-A50
GRM2-BX152-D50	GRM2-BX169-A50

Phone: 814-763-2915 • 800-458-1850 • Fax: 814-763-4423 • sales@greenleafcorporation.com • www. greenleafcorporation.com

Ring Max™ II

R Series

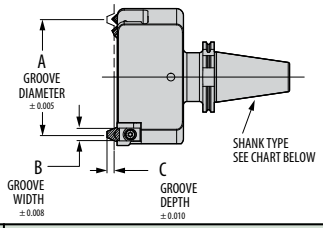

Part Number		Dimensions (mm)			Standard Components		Inserts	
Groove Series - Shank Type*	Stock	A	B	C	Grooving Cartidge	Chamfer Cartidge	Grooving Insert	Chamfer Insert
GRM2-R16-_ _ _ _	See chart below for stocked sizes.	50,80	8,74	6,35	GRM-GC-RSET 2 X	GRMCC01	GRM-GI-RSET 2 SX	SPGN-322
GRM2-R24-_ _ _ _		95,25	11,91	8,13	GRM-GC-RSET 1 X	GRMCC01	GRM-GI-RSET 1 SX	SPGN-322
GRM2-R27-_ _ _ _		107,95	11,91	8,13	GRM-GC-RSET 1 X	GRMCC01	GRM-GI-RSET 1 SX	SPGN-322
GRM2-R31-_ _ _ _		123,83	11,91	8,13	GRM-GC-RSET 1 X	GRMCC01	GRM-GI-RSET 1 SX	SPGN-322
GRM2-R35-_ _ _ _		136,53	11,91	8,13	GRM-GC-RSET 1 X	GRMCC01	GRM-GI-RSET 1 SX	SPGN-322
GRM2-R37-_ _ _ _		149,23	11,91	8,13	GRM-GC-RSET 1 X	GRMCC01	GRM-GI-RSET 1 SX	SPGN-322
GRM2-R39-_ _ _ _		161,93	11,91	8,13	GRM-GC-RSET 1 X	GRMCC01	GRM-GI-RSET 1 SX	SPGN-322
GRM2-R44-_ _ _ _		193,68	11,91	8,13	GRM-GC-RSET 1 X	GRMCC01	GRM-GI-RSET 1 SX	SPGN-322
GRM2-R46-_ _ _ _		211,15	13,49	9,91	GRM-GC-R46	GRMCC01	GRM-GI-R46R	SPGN-322

** See chart to below*

Shank Description	Ordering Code
CAT50/ANSI 50	A50
CAT40/ANSI 40	A40
NMTB-50	N50
NMTB-40	N40
BT-50	BT50
BT-40	BT40
DIN 2080-A 50	MN50
DIN 69871-A 50	D50
HSK-100	H100
CAPTO C-8	C8

Stocked Sizes
GRM2-R24-A50
GRM2-R24-D50
GRM2-R24N-A50
GRM2-R24N-D50

Ring Max™ II

RX Series / 10K and 15K Series

RX Series

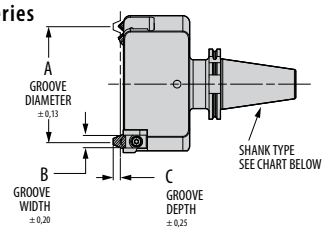

10/15K Series

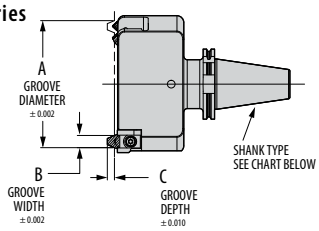

Part Number		Dimensions (mm)			Standard Components		Inserts	
Groove Series - Shank Type*	Stock	A	B	C	Grooving Cartidge	Chamfer Cartidge	Grooving Insert	Chamfer Insert
GRM2-RX201N-_ _ _ _	See chart below for stocked sizes.	46,05	5,56	4,06	GRM-GCRX201/5-X	N/A	GRM-GI-RX201/5SX	N/A
GRM2-RX205N-_ _ _ _		57,15	5,56	4,06	GRM-GCRX201/5-X	N/A	GRM-GI-RX201/5SX	N/A
GRM2-10K2-_ _ _ _		117,42	9,58	6,55	GRM-GC10/15K-X	GRMCC01	GRM-GI-10/15KSX	SPGN-322
GRM2-10K3N-_ _ _ _		146,00	9,58	6,55	GRM-GC10/15K-X	N/A	GRM-GI-10/15KSX	N/A
GRM2-10K5-_ _ _ _		222,20	9,58	6,55	GRM-GC10/15K-X	GRMCC01	GRM-GI-10/15KSX	SPGN-322
GRM2-15K3-_ _ _ _		168,22	9,58	6,55	GRM-GC10/15K-X	GRMCC01	GRM-GI-10/15KSX	SPGN-322

** See chart to below*

Shank Description	Ordering Code
CAT50/ANSI 50	A50
CAT40/ANSI 40	A40
NMTB-50	N50
NMTB-40	N40
BT-50	BT50
BT-40	BT40
DIN 2080-A 50	MN50
DIN 69871-A 50	D50
HSK-100	H100
CAPTO C-8	C8

Stocked Sizes
Ring Max™ II RX and 10/15K Series are not standard stocked items.

Phone: 814-763-2915 • 800-458-1850 • Fax: 814-763-4423 • sales@greenleafcorporation.com • www. greenleafcorporation.com

Ring Max™ II

Assembled and Exploded Views Reference Guide

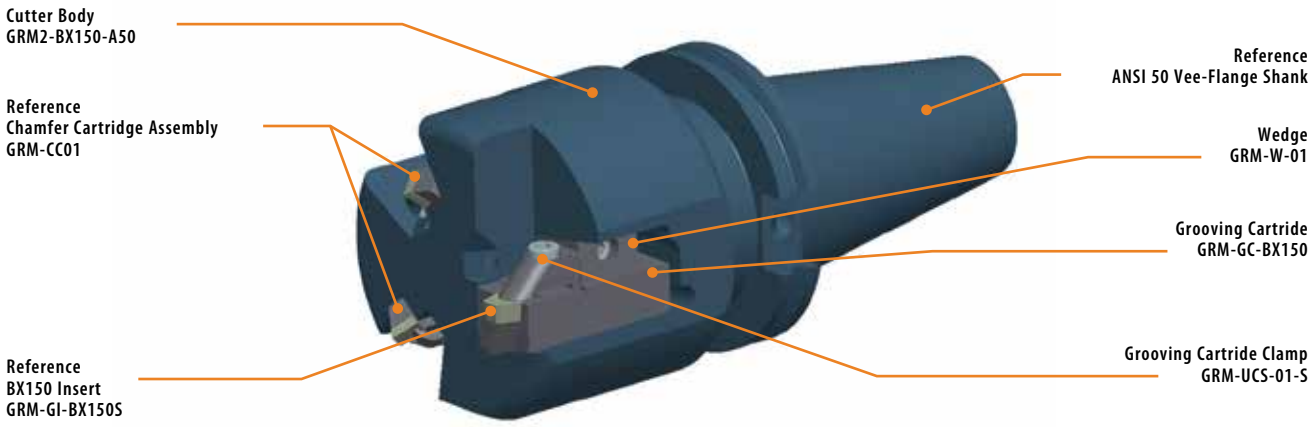

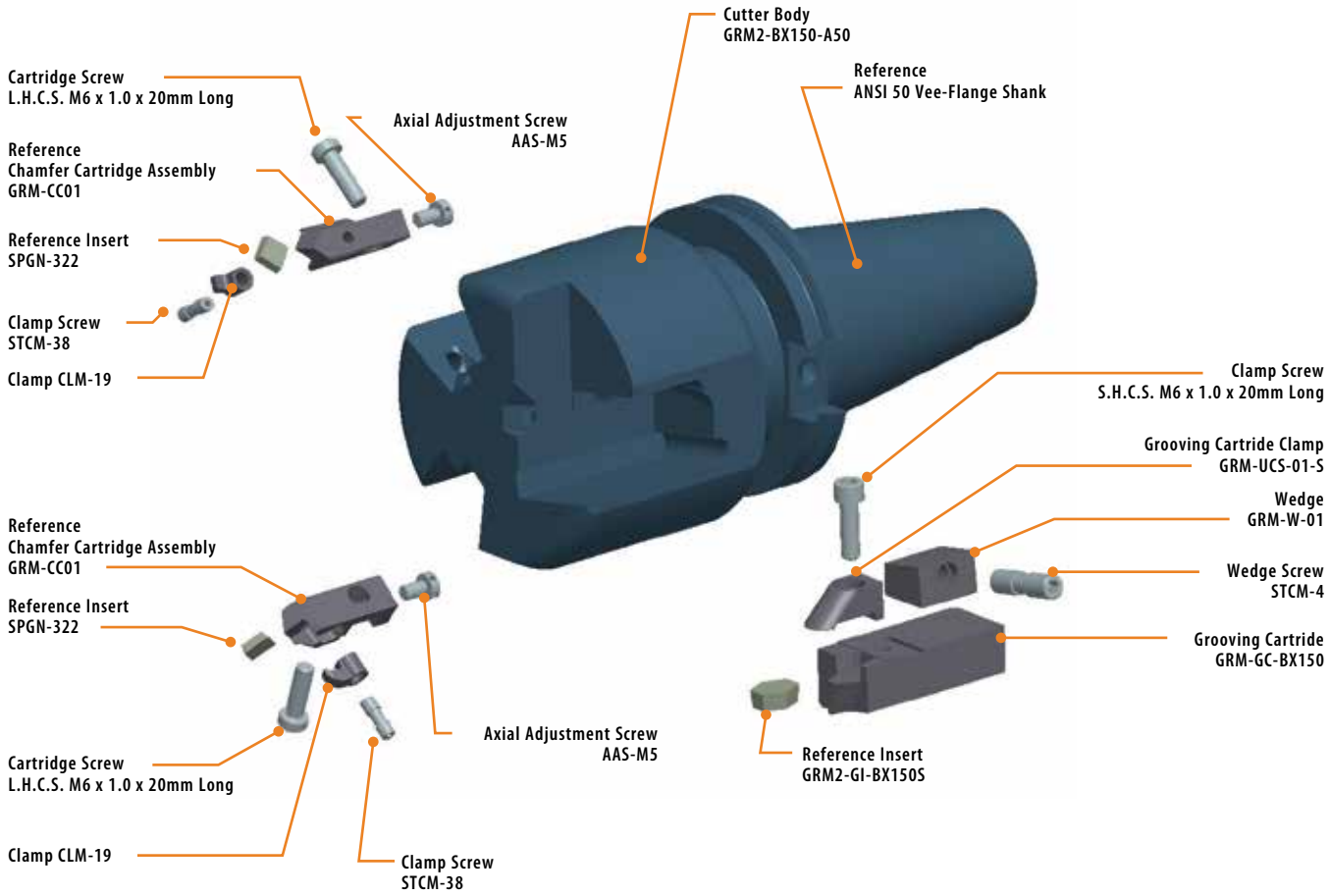

Ring Max™ II Quote Request Form For information for a quote form you can download, see page RM 31.

Phone: 814-763-2915 • 800-458-1850 • Fax: 814-763-4423 • sales@greenleafcorporation.com • www. greenleafcorporation.com

Ring Max™ BX-152 Pre-Clad

Assembled and Exploded Views Reference Guide

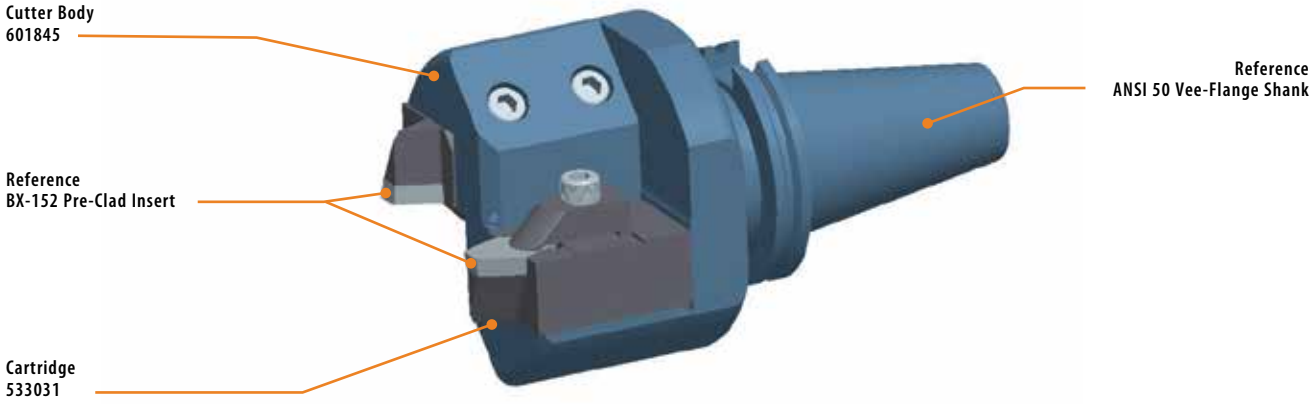

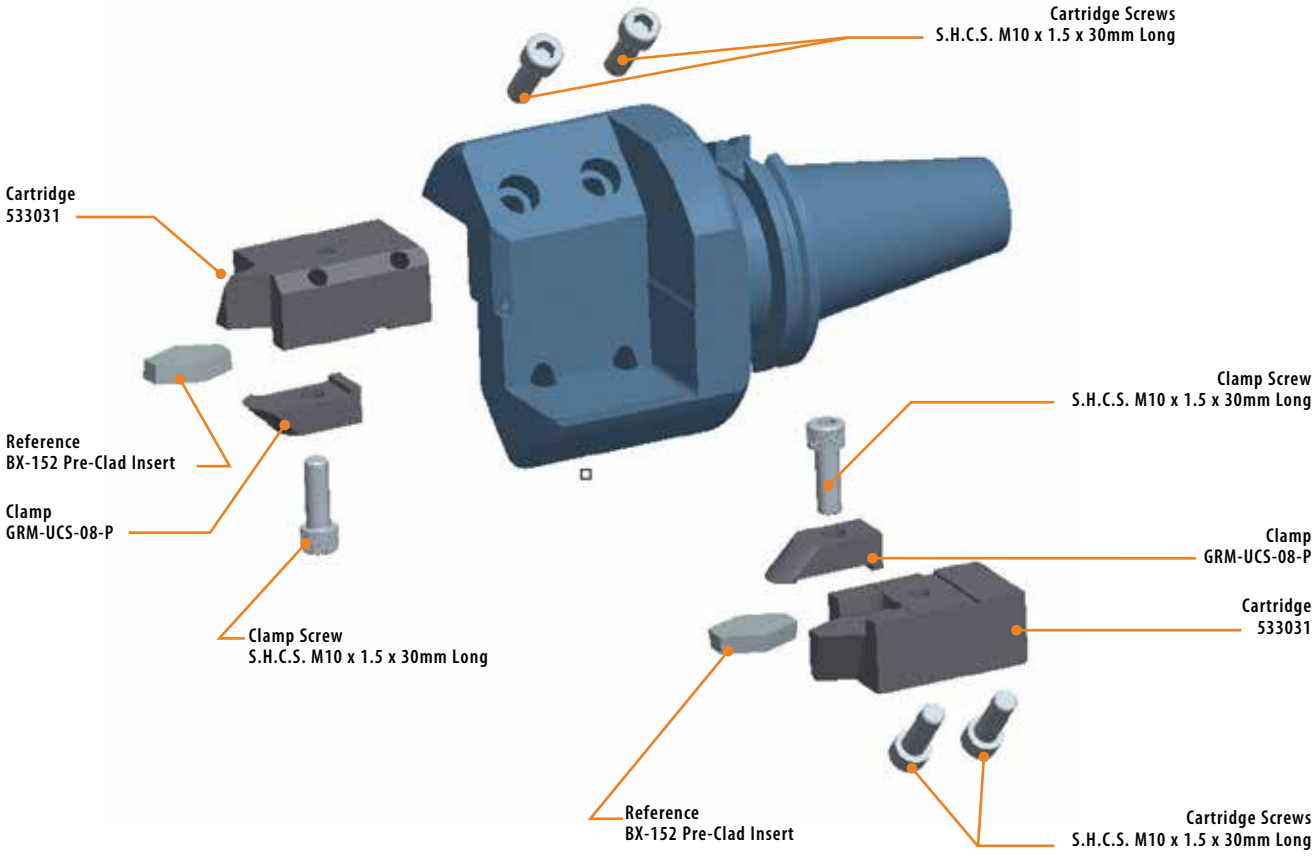

Special Toolchanger Clearance Request Form For information for a quote form you can download, see page RM 31.

Phone: 814-763-2915 • 800-458-1850 • Fax: 814-763-4423 • sales@greenleafcorporation.com • www. greenleafcorporation.com

Ring Max™ III Ring Groove Tooling

The Ring Max™ III is a high-precision, two-piece modular system for shop versatility. This system offers many head and shank configurations, including adaptability to Greenleaf's Excelerator® face mills. The Ring Max™ III line delivers the ultimate economical and flexible solution for any shop machining multiple API ring groove sizes.

Standard features and benefits include:

- Cutting of BX, R, and RX API ring grooves in Inconel 625 clad overlay in less than one minute.
- Machines the groove and chamfers in one operation.
- Adjustable and replaceable cartridge design for easy maintenance.

Please contact Greenleaf Corporation for any questions or assistance.

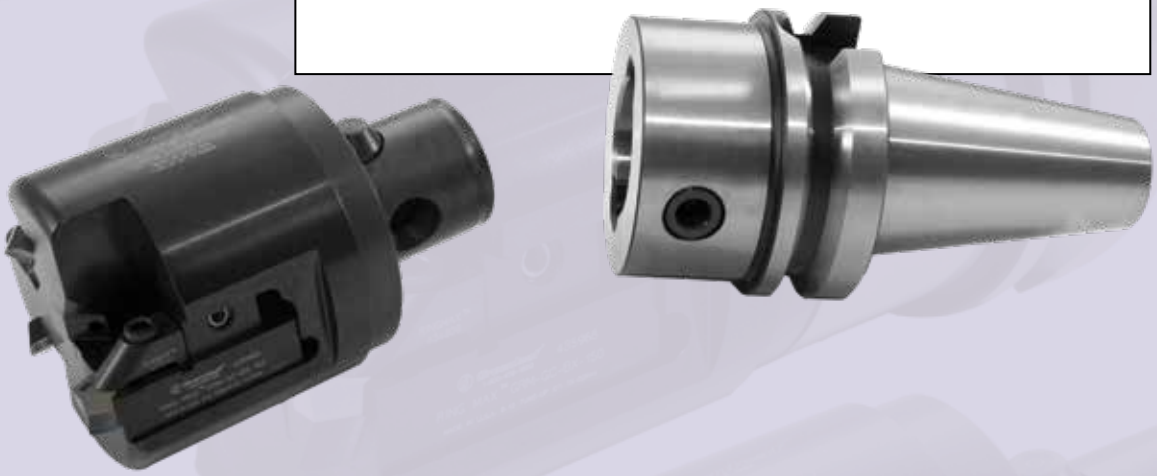

Phone: 814-763-2915 • 800-458-1850 • Fax: 814-763-4423 • sales@greenleafcorporation.com • www. greenleafcorporation.com

Ring Max™ III

Finishing Head Identification System

GRM3

- **Greenleaf Ring Max™**
- **Generation 3 Interchangable Shank**

BX150_

Ring Groove Size

BX-150	R-16	RX-201
BX-151	R-24	RX-205
BX-152	R-27	10K 2-1/16
BX-153	R-31	10K 3-1/16
BX-154	R-35	15K 3-1/16
BX-155	R-37	
BX-156	R-39	
BX-169	R-44	

NOTE: API specification GA/ISO-10423 groove size

Chamfer Designation

BLANK	*Finishing head with chamfer stations*
N	*No chamfer stations*
X	*Special variation*

NOTE: N or X variations denote special design and will be priced accordingly.

Phone: 814-763-2915 • 800-458-1850 • Fax: 814-763-4423 • sales@greenleafcorporation.com • www. greenleafcorporation.com

Pictorial & Reference Index

Ring Max™ III Tooling

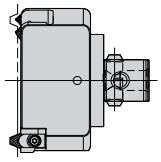

BX Series
R Series
RX Series
10/15K Series
page: RM 18

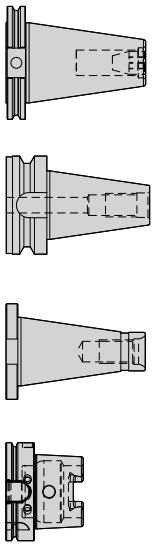

Ring Max™
Shank Options
page: RM 19

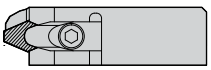

Ring Max™
Grooving Cartridge
page: RM 23

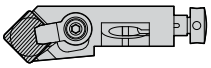

Ring Max™
Chamfer Cartridge
page: RM 24

Reference

Ring Max™ III
Models
page: RM 20

Ring Max™ III Pre-Clad
Models
page: RM 21

Machining Methods
Reference Guide
page: RM 30

Pre-Clad Head
Quote Request Form
page: RM 31

Phone: 814-763-2915 • 800-458-1850 • Fax: 814-763-4423 • sales@greenleafcorporation.com • www. greenleafcorporation.com

Ring Max™ III

BX Series / R Series / RX and 10/15K Series

BX and 10/15K Series

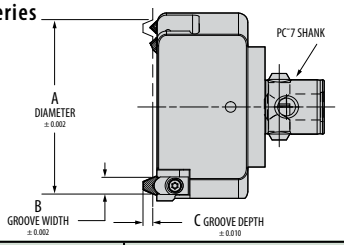

R and RX Series

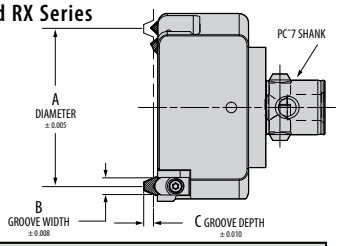

	Part Number	Dimensions (mm)			Standard Components		Inserts	
	Groove Series - Shank Type*	A	B	C	Grooving Cartidge	Chamfer Cartidge	Grooving Insert	Chamfer Insert
BX Series	GRM3-BX150	73,53	11,48	5,84	GRM-GI-BX-150	GRMCC01	GRM-GI-BX150S	SPGN-322
	GRM3-BX151	77,83	11,89	5,84	GRM-GI-BX-151	GRMCC01	GRM-GI-BX151S	SPGN-322
	GRM3-BX152	86,28	12,70	6,10	GRM-GI-BX-152	GRMCC01	GRM-GI-BX152S	SPGN-322
	GRM3-BX153	102,82	14,12	7,11	GRM-GI-BX-153	GRMCC01	GRM-GI-BX153S	SPGN-322
	GRM3-BX154	119,05	15,44	7,87	GRM-GI-BX-154	GRMCC01	GRM-GI-BX154S	SPGN-322
	GRM3-BX155	150,67	17,78	8,64	GRM-GI-BX-155	GRMCC01	GRM-GI-BX155R	SPGN-322
	GRM3-BX169	176,71	16,97	9,91	GRM-GI-BX-169	GRMCC01	GRM-GI-BX169R	SPGN-322
R Series	GRM3-R16	50,80	8,74	6,35	GRM-GI-RSET 2 AX	GRMCC01	GRM-GI-RSET 2 SX	SPGN-322
	GRM3-R24	95,25	11,91	8,13	GRM-GI-RSET 1 X	GRMCC01	GRM-GI-RSET 1 SX	SPGN-322
	GRM3-R27	107,95	11,91	8,13	GRM-GI-RSET 1 X	GRMCC01	GRM-GI-RSET 1 SX	SPGN-322
	GRM3-R31	123,83	11,91	8,13	GRM-GI-RSET 1 X	GRMCC01	GRM-GI-RSET 1 SX	SPGN-322
	GRM3-R35	136,53	11,91	8,13	GRM-GI-RSET 1 X	GRMCC01	GRM-GI-RSET 1 SX	SPGN-322
	GRM3-R37	149,23	11,91	8,13	GRM-GI-RSET 1 X	GRMCC01	GRM-GI-RSET 1 SX	SPGN-322
	GRM3-R39	161,93	11,91	8,13	GRM-GI-RSET 1 X	GRMCC01	GRM-GI-RSET 1 SX	SPGN-322
	GRM3-R44	193,68	11,91	8,13	GRM-GI-RSET 1 X	GRMCC01	GRM-GI-RSET 1 SX	SPGN-322
RX and 10/15K Series	GRM3-RX201N	46,05	5,56	4,06	GRM-GIRX201/5-X	N/A	GRM-GI-RX201/5SX	N/A
	GRM3-RX205N	57,15	5,56	4,06	GRM-GIRX201/5-X	N/A	GRM-GI-RX201/5SX	N/A
	GRM3-10K2	117,42	9,58	6,55	GRM-GI10/15K-X	GRMCC01	GRM-GI-10/15KSX	SPGN-322
	GRM3-10K3N	146,00	9,58	6,55	GRM-GI10/15K-X	N/A	GRM-GI-10/15KSX	N/A
	GRM3-15K3	168,22	9,58	6,55	GRM-GI10/15K-X	GRMCC01	GRM-GI-10/15KSX	SPGN-322

NOTE: Due to blank availability, special designs may need to be a two-piece weld construction or no quote.

Phone: 814-763-2915 • 800-458-1850 • Fax: 814-763-4423 • sales@greenleafcorporation.com • www. greenleafcorporation.com

Ring Max™ III

Shank Options

Adapter Designation	Shank A	Shank B
04-GRMA50-000	PC-7	CAT-50 (ANSI-50) Vee Flange
04-GRMA50-000		DIN-69871 (ISO-50) Vee Flange
04-GRMBT50-000		BT-50 Vee Flange
04-GRMNMTB50-000		NMTB-50 Vee Flange
04-GRMHSK100-000		HSK-100A

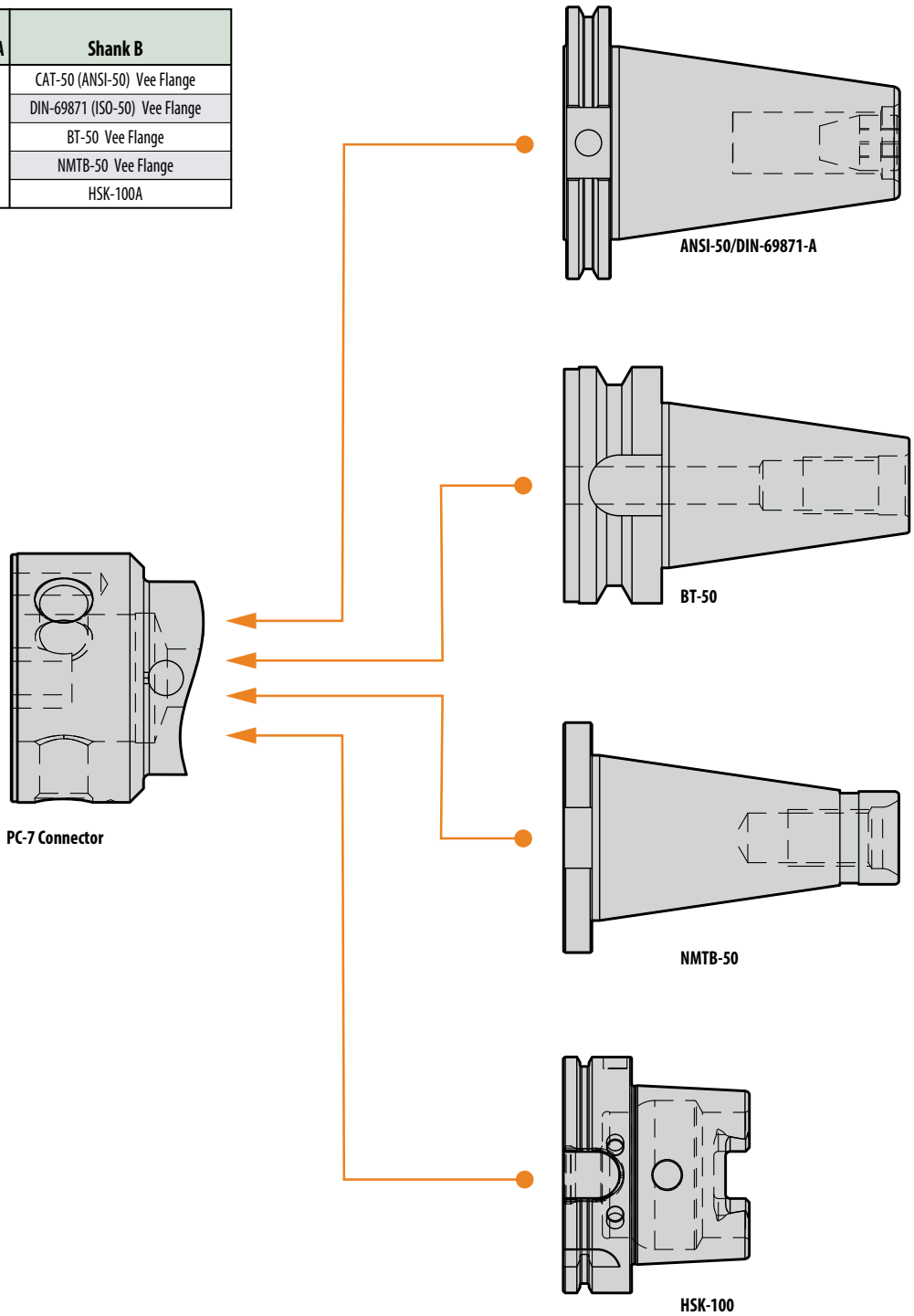

Ring Max™ GRM3-BX155

Assembled and Exploded Views Reference Guide

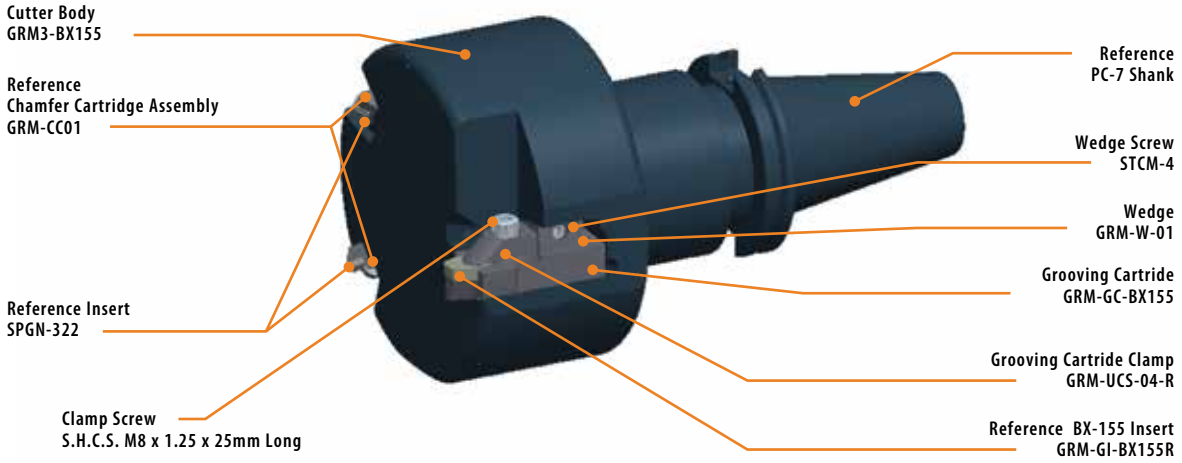

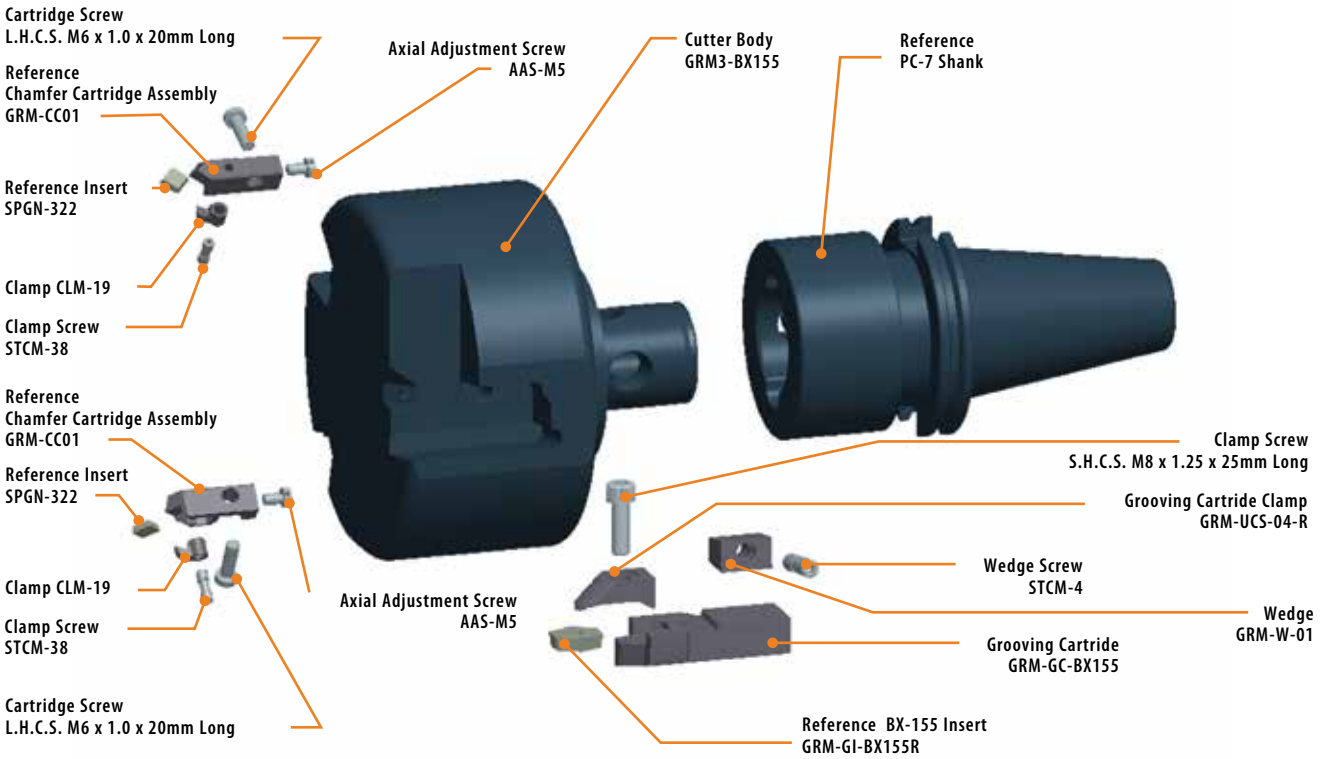

Special Toolchanger Clearance Request Form For information for a quote form you can download, see page RM 31.

Phone: 814-763-2915 • 800-458-1850 • Fax: 814-763-4423 • sales@greenleafcorporation.com • www. greenleafcorporation.com

Ring Max™ III Pre-Clad

Assembled and Exploded Views Reference Guide

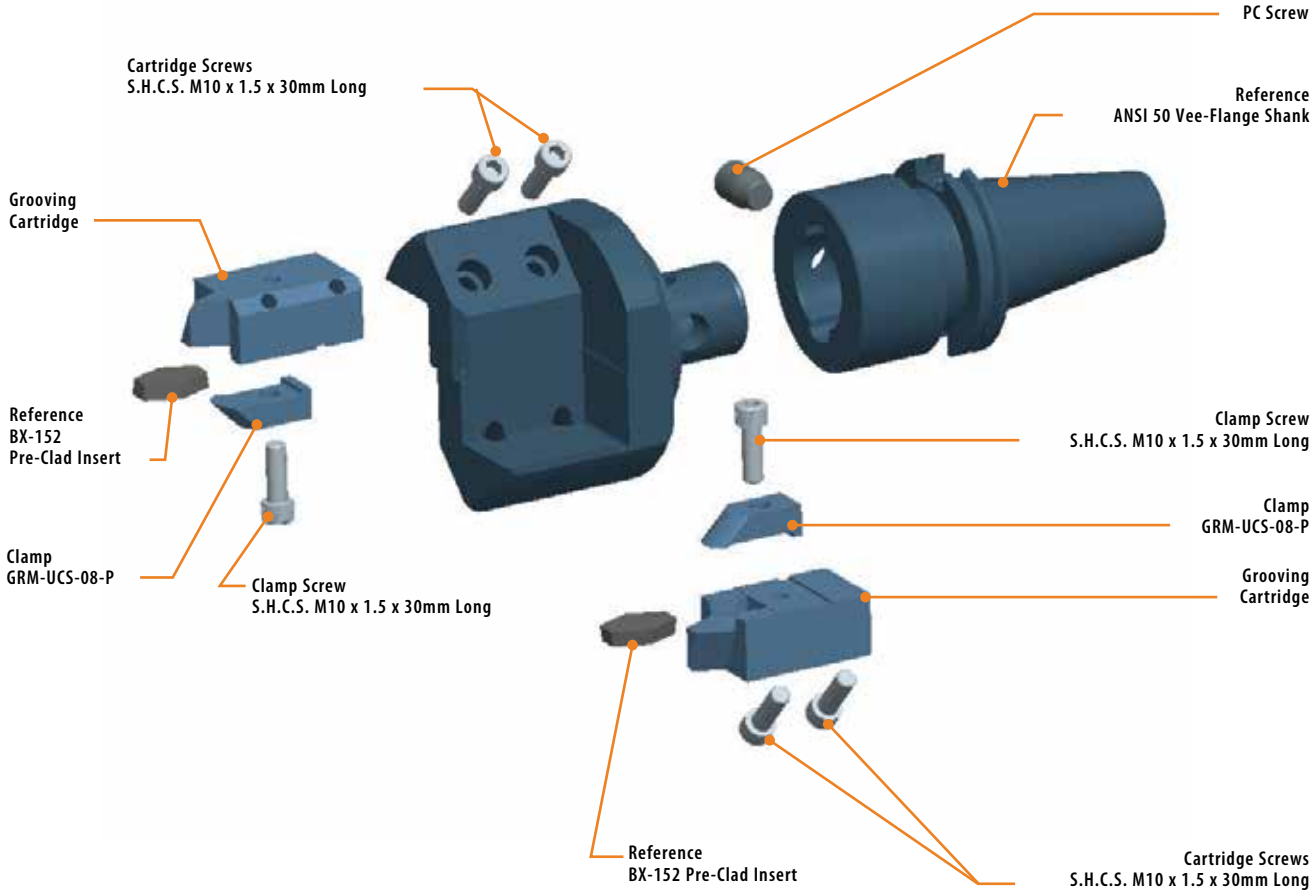

Ring Max™ III Pre-Clad Head Quote Request Form For information for a quote form you can download, see page RM 31.

Phone: 814-763-2915 • 800-458-1850 • Fax: 814-763-4423 • sales@greenleafcorporation.com • www. greenleafcorporation.com

Ring Max™

Grooving Cartridge Identification System

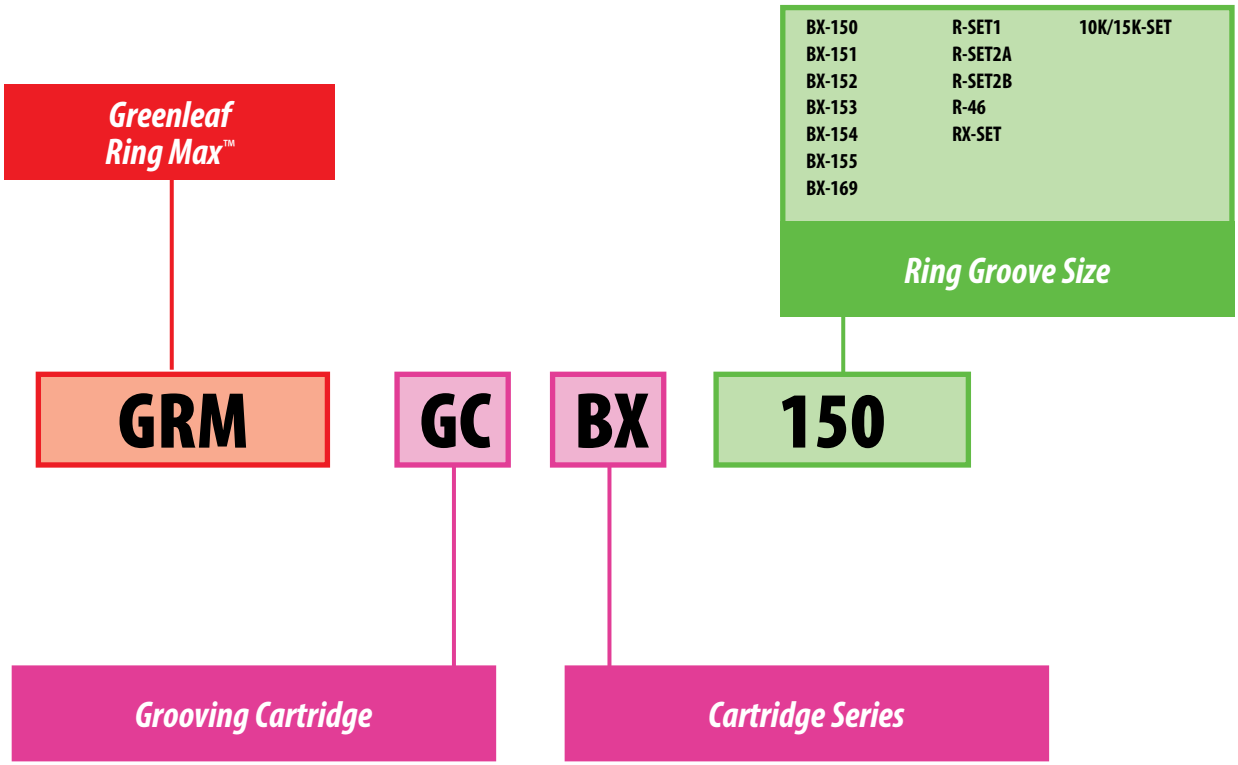

Phone: 814-763-2915 • 800-458-1850 • Fax: 814-763-4423 • sales@greenleafcorporation.com • www. greenleafcorporation.com

Ring Max™

Grooving Cartridge

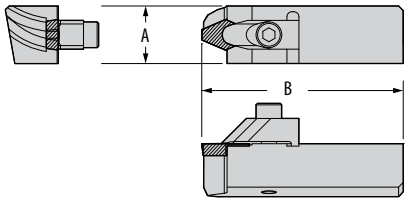

Cartridge		Dimensions (mm)		Standard Components		Inserts
Groove Size	**Part Number**	**A**	**B**	**Clamp**	**Clamp Screw**	**Purchased Seperately**
BX-150	**GRM-GC-BX-150**	25,40	66,68	GRMUCS01S	M6-1.0 SHCS	GRM-GI-BX150S
BX-151	**GRM-GC-BX-151**	25,40	66,68	GRMUCS01S	M6-1.0 SHCS	GRM-GI-BX151S
BX-152	**GRM-GC-BX-152**	25,40	66,68	GRMUCS01S	M6-1.0 SHCS	GRM-GI-BX152S
BX-153	**GRM-GC-BX-153**	25,40	66,68	GRMUCS01S	M6-1.0 SHCS	GRM-GI-BX153S
BX-154	**GRM-GC-BX-154**	28,37	66,68	GRMUCS01S	M6-1.0 SHCS	GRM-GI-BX154S
BX-155	**GRM-GC-BX-155**	31,98	79,38	GRMUCS04R	M8-1.25 SHCS	GRM-GI-BX155R
BX-156	**GRM-GC-BX-156**	30,18	79,38	GRMUCS04R	M8-1.25 SHCS	GRM-GI-BX156R
BX-169	**GRM-GC-BX-169**	25,40	79,38	GRMUCS04R	M8-1.25 SHCS	GRM-GI-BX169R
R-SET1*	**GRM-GCRSET1-X**	25,40	79,38	GRMUCS03S	M6-1.0 SHCS	GRM-GI-RSET1SX
R-SET2A*	**GRM-GCRSET2A-X**	19,05	66,68	GRMUCS05S	M5-0.8 SHCS	GRM-GI-RSET2SX
R-SET2B*	**GRM-GCRSET2B-X**	25,40	66,68	GRMUCS03S	M5-0.8 SHCS	GRM-GI-RSET2SX
R-46	**GRM-GCR46**	25,40	79,38	GRMUCS04R	M8-1.25 SHCS	GRM-GI-R46R
RX-SET*	**GRM-GCRX201/5-X**	19,05	66,68	GRMUCS05S	M5-0.8 SHCS	GRM-GI-RX201/5SX
10/15K-SET*	**GRM-GC10/15-X**	25,40	66,68	GRMUCS05S	M5-0.8 SHCS	GRM-GI-10/15KSX

**** Denotes multiple groove sizes (See chart below.)***

Multiple-Groove Compatibility

Single cartridges can produce multiple grooves when used in the proper gage diameter Ring Max™ grooving head.
Use this chart for compatibility.

Shank Description	Ordering Code
R-SET1	R-21, R-23, R-24, R-26, R-27, R-31, R-35, R-37, R-39, R-41, R-44, R-45, R-49, R-53, R-57, R-65, R-69, R-82, R-84
R-SET2A	R-12, R-13, R-14, R-15, R-16, R-17, R-18, R-19, R-20
R-SET2B	R-22, R-25, R-29, R-33, R-36, R-40, R-43, R-48, R-52
RX-SET	RX-201, RX-205
10/15K-SET	10K-2$^{1}/_{16}$", 10K-3$^{1}/_{16}$", 10K-5$^{1}/_{16}$", 15K-3$^{1}/_{16}$"

Ring Max™

Chamfer Cartridge

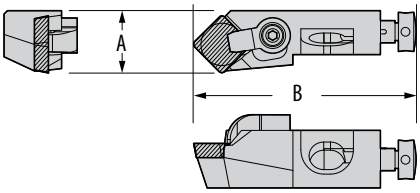

Cartridge	Dimension (mm)		Standard Components			Inserts	Mounting Screws
	A	B	Clamp	Clamp Screw	Adj. Screw	Purchased Seperately	Supplied with Grooving Head
GRM-CC01	14,00	50,06	CLM-19	STCM-38	AAS-M5	SPGN-322	M6-1.0 LHCS

All Ring Max™ heads for generation 2 and 3 use the same chamfer cartridges.

Phone: 814-763-2915 • 800-458-1850 • Fax: 814-763-4423 • sales@greenleafcorporation.com • www. greenleafcorporation.com

Ring Max™ STX – Lathe Tooling

The Ring Max™ STX system provides the same productivity gains as the Ring Max™ II and Ring Max™ III systems in a square shank tool. Whether you are machining a large diameter groove, or a standard BX, R, or RX groove, the Ring Max™ STX system is your solution for maximizing productivity in multiple API ring groove sizes.

Standard features and benefits include:

- Roughing and finishing of BX, R, and RX API ring grooves in Inconel 625 clad overlay in less than one minute.
- Utilization of the same clamping system and inserts as the Ring Max™ II and Ring Max III™ cutter systems.
- Available in common standard inch and metric shank sizes.

Please contact Greenleaf Corporation for any questions or assistance.

Ring Max™ STX

Lathe Tooling Identification System

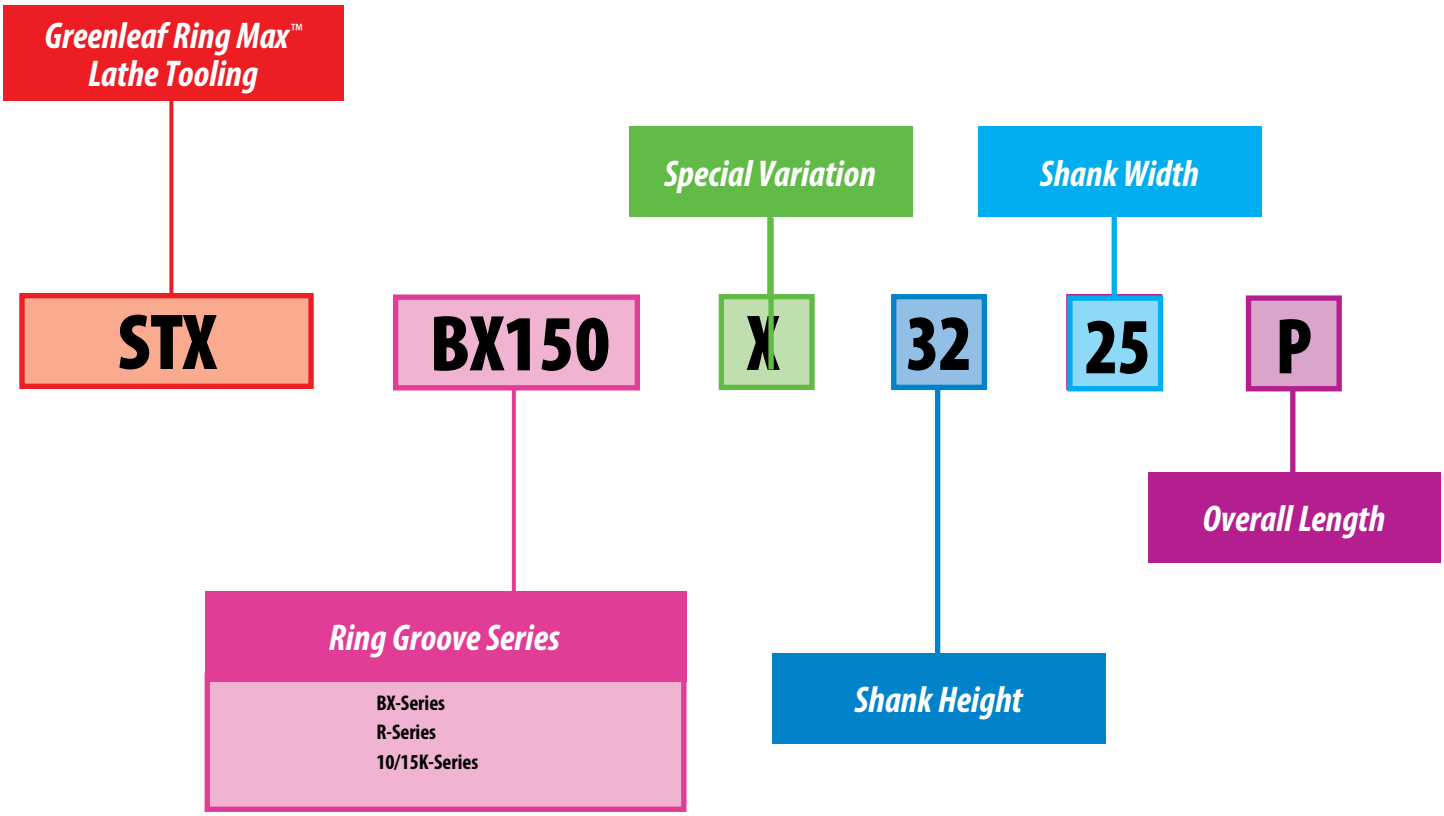

Phone: 814-763-2915 • 800-458-1850 • Fax: 814-763-4423 • sales@greenleafcorporation.com • www. greenleafcorporation.com

Pictorial & Reference Index

RING MAX™ Lathe Tooling

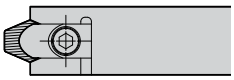

Ring Max™ STX
Lathe Tooling
page: RM 28

Reference

Ring Max™ STX
Models
page: RM 29

Lathe Tool
Quote Request Form
page: RM 31

Ring Max™ STX

Lathe Tooling

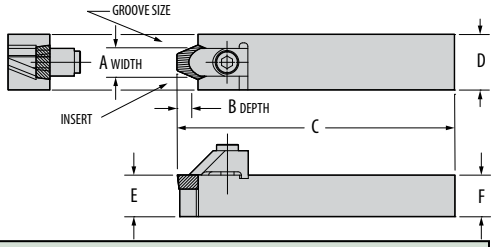

Holder		Dimensions (inches)					
Groove Size	Part Number	A†	B†	C	D	E	F
BX-150	STXBX1502525P	11,48	5,84	170	25	25	25
	STXBX1503225P	11,48	5,84	170	25	32	32
BX-151	STXBX1512525P	11,89	5,84	170	25	25	25
	STXBX1513225P	11,89	5,84	170	25	32	32
BX-152	STXBX1522525P	12,70	6,10	170	25	25	25
	STXBX1523225P	12,70	6,10	170	25	32	32
BX-154	STXBX1542525P	15,44	7,87	170	25	25	25
	STXBX1543225P	15,44	7,87	170	25	32	32
BX-155	STXBX1552525P	17,78	8,64	170	25	25	25
	STXBX1553225P	17,78	8,64	170	25	32	32
BX-156	STXBX1562525P	23,44	11,43	170	25	25	25
	STXBX1563225P	23,44	11,43	170	25	32	32
BX-169	STXBX1692525P	16,97	9,91	170	25	25	25
	STXBX1693225P	16,97	9,91	170	25	32	32
R-SET1SX*	STXRSET12525P	11,91	8,13	170	25	25	25
	STXRSET13225P	11,91	8,13	170	25	32	32
R-SET2SX*	STXRSET22525P	8,74	6,35	170	25	25	25
	STXRSET23225P	8,74	6,35	170	25	32	32
R-46R	STXR462525P	13,49	9,91	170	25	25	25
	STXR463225P	13,49	9,91	170	25	32	32
10/15KSX*	STX1015KX2525P	9,58	6,55	170	25	25	25
	STX1015KX3225P	9,58	6,55	170	25	32	32

† Groove width and depth tolerances comply with API Standard 6A/ISO 10423.
** Denotes multiple groove sizes (See Multiple-Groove Compatibility chart below.)*

Groove Size	Standard Components		Inserts Purchased Seperately
	Clamp	Clamp Screw	
BX-150	GRMUCS01S	M6-1.0 SHCS	GRM-GI-BX150S
BX-151	GRMUCS01S	M6-1.0 SHCS	GRM-GI-BX151S
BX-152	GRMUCS01S	M6-1.0 SHCS	GRM-GI-BX152S
BX-154	GRMUCS01S	M6-1.0 SHCS	GRM-GI-BX154S
BX-155	GRMUCS04R	M8-1.25 SHCS	GRM-GI-BX155R
BX-156	GRMUCS04R	M8-1.25 SHCS	GRM-GI-BX156R
BX-169	GRMUCS04R	M8-1.25 SHCS	GRM-GI-BX169R
R-SET1SX*	GRMUCS03S	M6-1.0 SHCS	GRM-GI-RSET1SX
R-SET2SX*	GRMUCS05S	M5-0.8 SHCS	GRM-GI-RSET2SX
R-46R	GRMUCS04R	M8-1.25 SHCS	GRM-GI-R46R
10/15KSX*	GRMUCS05S	M5-0.8 SHCS	GRM-GI-10/15KSX

Multiple-Groove Compatibility

Single cartridges can produce multiple grooves. Use this chart for compatibility.

Shank Description	Ordering Code
R-SET1SX	R-21, R-23, R-24, R-26, R-27, R-31, R-35, R-37, R-39, R-41, R-44, R-45, R-49, R-53, R-57, R-65, R-69, R-82,R-84
R-SET2SX	R-12, R-13, R-14, R-15, R-16, R-17, R-18, R-19, R-20
10/15K-SET	10/15K, 10K-2 1/16", 10K-3 1/16"

Phone: 814-763-2915 • 800-458-1850 • Fax: 814-763-4423 • sales@greenleafcorporation.com • www. greenleafcorporation.com

Ring Max™ STX

Assembled and Exploded Views Reference Guide

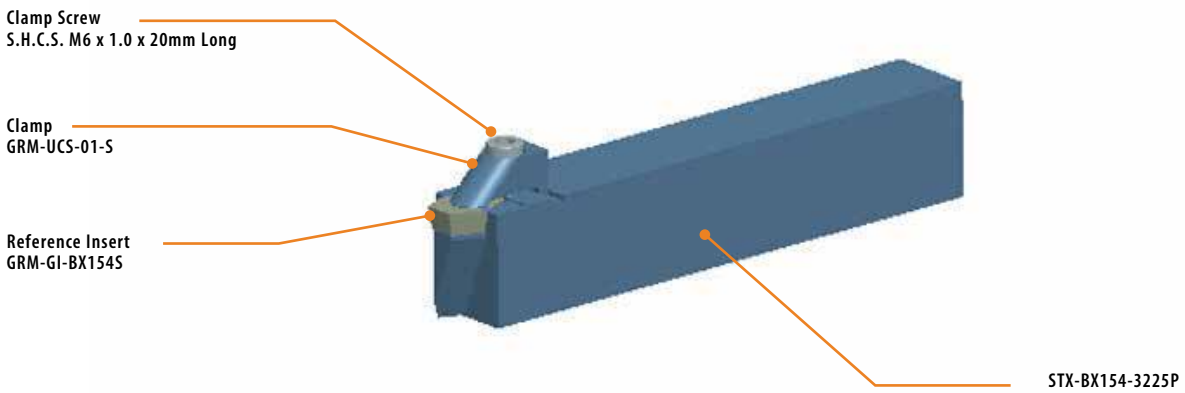

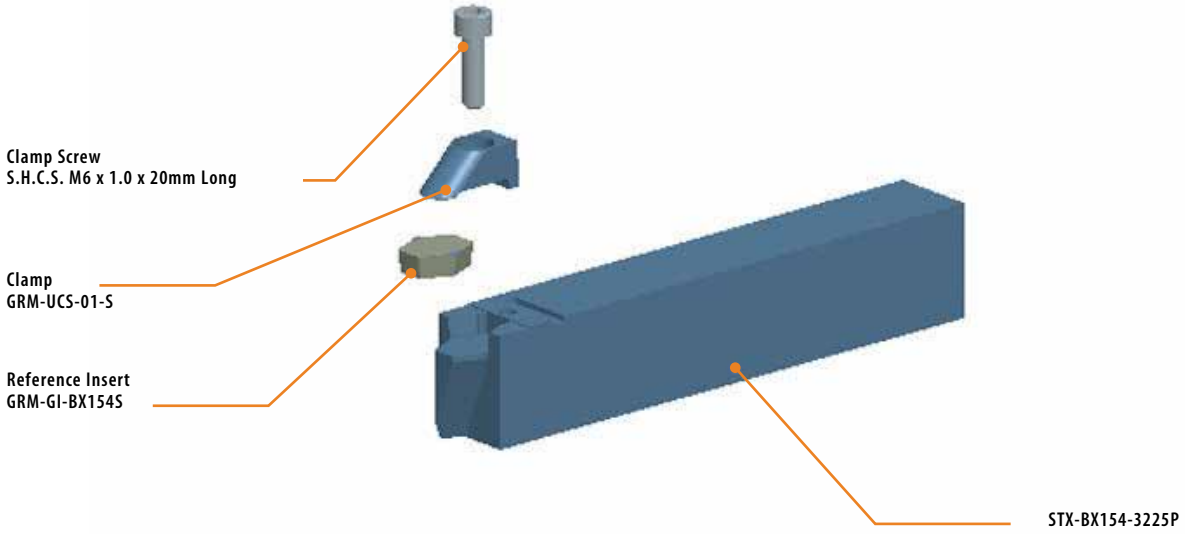

Ring Max™ Lathe Quote Request Form For information for a quote form you can download, see page RM 31.

Ring Max™

Machining Methods Reference Guide

Method One

Use these instructions for setting gage points and establishing target ring groove depths using an optical comparator.

Step One:

Using an optical comparator, find and set the gage points at the groove's A diameter at mid-tolerance. The groove's B dimension will be within the allowable tolerance range.

Step Two:

Once the gage points in Step One have been determined, measure, and record the tool's Z length and the actual measured C dimension over the insert nose.

NOTE: The measured C dimension is the target machining depth and will be within the groove's allowable part tolerance.

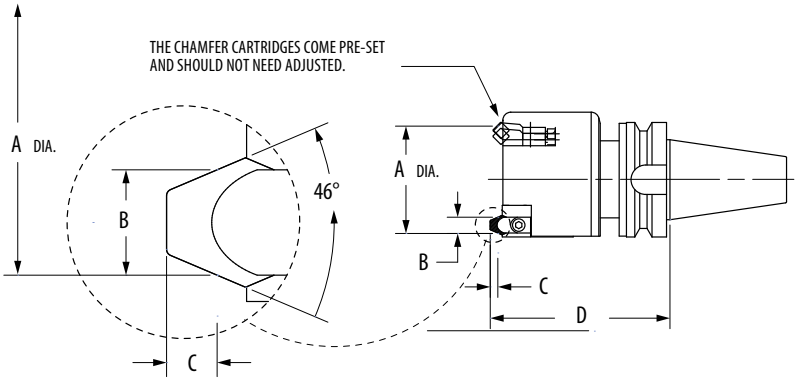

Example for BX-152

A		B	C		Z
Part print dimension and tolerance	Target this diameter for gage points	Part print dimension and tolerance	Part print dimension and tolerance	Measure and target this depth for programming	Measure and target this depth for programming
86,233mm +0.10 −0.00	86,283mm	12,649mm +0.10 −0.00	5,84mm		

Method Two

This method is used to machine ring grooves in a rough and finish pass.

Step One:

Machine the groove but reduce the groove depth to leave stock for the finish pass.

Step Two:

Measure the groove's A diameter and use the chart below to determine the additional D depth necessary to bring the A diameter into mid-tolerance.

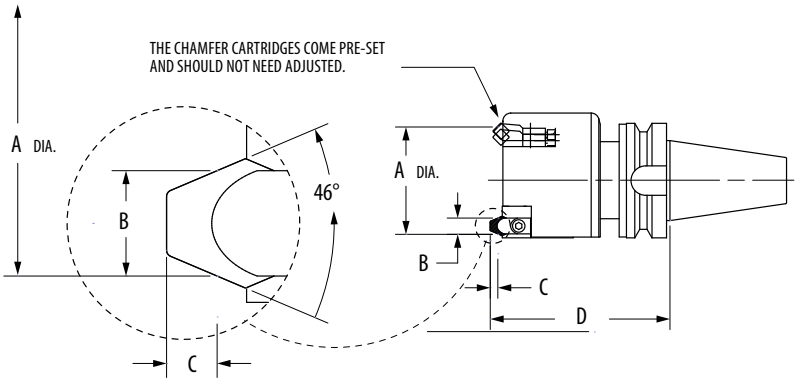

If the A groove diameter is undersize by:	Increase the groove depth D by:
0.025mm	0.029mm
0.050mm	0.059mm
0.075mm	0.088mm
0.100mm	0.118mm
0.125mm	0.147mm
0.150mm	0.177mm
0.175mm	0.206mm
0.200mm	0.236mm
0.225mm	0.265mm
0.250mm	0.295mm
0.275mm	0.324mm
0.300mm	0.353mm

Phone: 814-763-2915 • 800-458-1850 • Fax: 814-763-4423 • sales@greenleafcorporation.com • www. greenleafcorporation.com

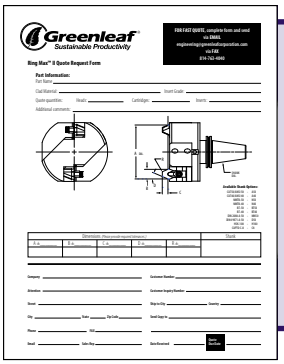

Ring Max™ II Quote Request Form

We have a Ring Max™ II Quote Request Form that you can download at —
https://www.greenleafcorporation.com/RingMax2QuoteRequest.pdf

If you have any questions, contact the Greenleaf Tech Team at 800-458-1850,
or email the engineering department at engineering@greenleafcorporation.com.

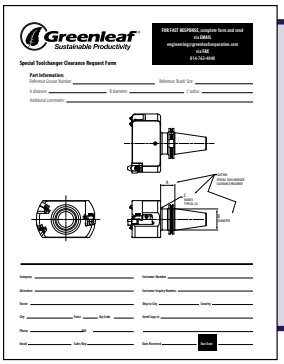

Special Toolchanger Clearance Request Form

We have a Special Toolchanger Clearance Request Form that you can download at —
https://www.greenleafcorporation.com/SpecialToolchangerClearanceRequest.pdf

If you have any questions, contact the Greenleaf Tech Team at 800-458-1850,
or email the engineering department at engineering@greenleafcorporation.com.

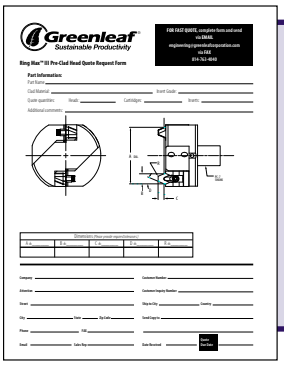

Ring Max™ III Pre-Clad Head Quote Request Form

We have a Ring Max™ III Pre-Clad Head Quote Request Form that you can download at —
https://www.greenleafcorporation.com/RingMax3QuoteRequest.pdf

If you have any questions, contact the Greenleaf Tech Team at 800-458-1850,
or email the engineering department at engineering@greenleafcorporation.com.

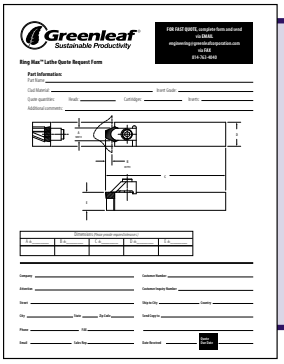

Ring Max™ Lathe Quote Request Form

We have a Ring Max™ III Pre-Clad Head Quote Request Form that you can download at —
https://www.greenleafcorporation.com/RingMax3QuoteRequest.pdf

If you have any questions, contact the Greenleaf Tech Team at 800-458-1850,
or email the engineering department at engineering@greenleafcorporation.com.