Greenleaf®

Sustainable Productivity

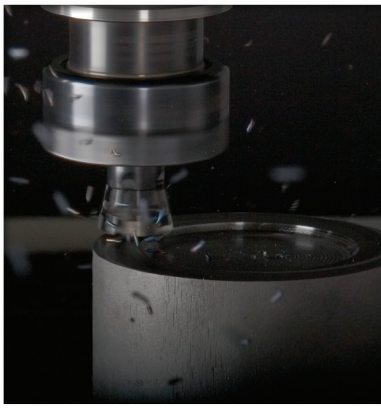

PRODUCTGUIDE

METALCUTTING TOOLS AND SYSTEMS

Circa Late 1950s

Present Day

Greenleaf Corporation is a leading developer of cutting-tool technology. We specialize in the manufacture of high-performance tungsten carbide and ceramic inserts as well as innovative tool-holding systems. Greenleaf continues to build on nearly 80 years of innovation. We center ourselves on supplying customers with productive solutions to every metal-cutting need.

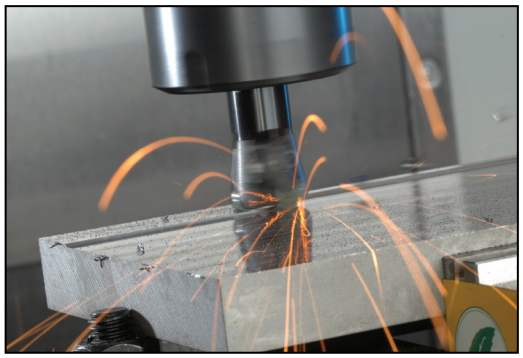

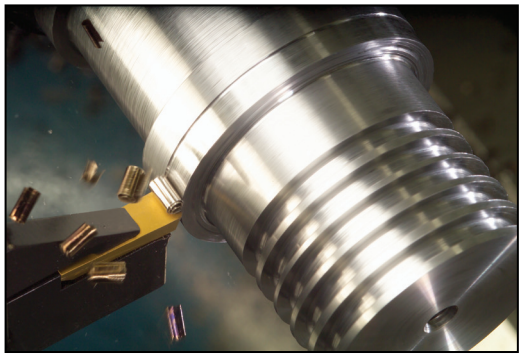

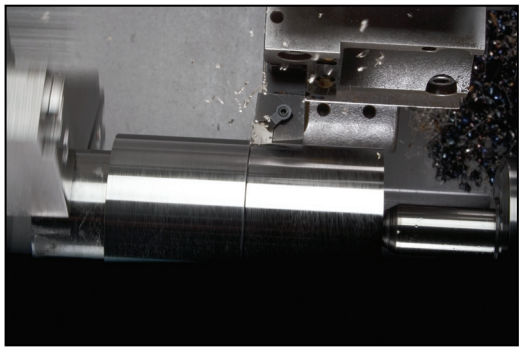

WG-300®/ WG-600®/ WG-700™

The world's most productive whisker-reinforced ceramic inserts.

WG-300® is extremely successful at machining hard materials such as hard steels and nickel- and cobalt-based super alloys. It offers excellent wear and shock resistance at high surface speeds.

WG-600® has the advantage of offering 2-3 times longer tool life over uncoated whiskered ceramics. WG-600® excels at machining high-strength alloy materials, hardened steels and other difficult-to-cut materials.

WG-700™ is ideal for machining nickel- and cobalt-based super alloys and other difficult-to-machine materials. WG-700™ is capable of greater feed rates and higher speed machining than any other whisker grade with exceptional tool life.

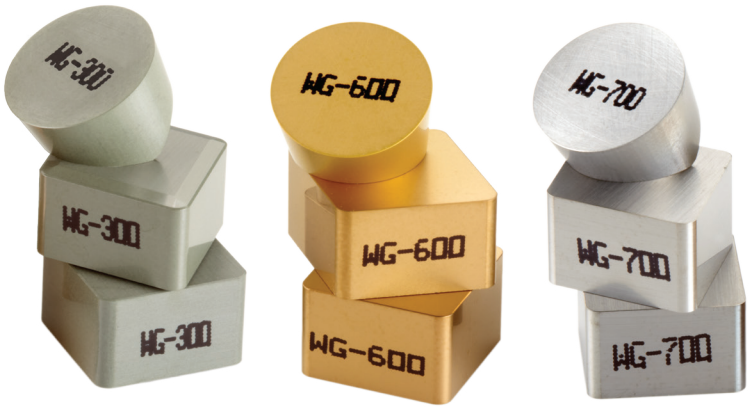

Ceramic Inserts

Greenleaf is the industry leader in the development and manufacture of ceramic and coated ceramic inserts in ANSI standard and special geometries.

WG-300®

- Whisker-reinforced Al_2O_3 ceramic for machining nickel- and cobalt-based super alloys and hard steels
- Excellent thermal and shock resistance at very high surface speeds
- First choice worldwide for milling, grooving and turning difficult-to-cut, non-ferrous materials

WG-600®

- Coated whisker-reinforced Al_2O_3 ceramic for machining nickel- and cobalt-based super alloys and hard steels
- Excellent thermal and wear resistance at very high surface speeds
- Extended tool life over uncoated whisker-reinforced ceramics

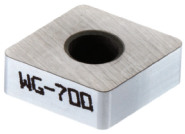

WG-700™

- New coated whisker-reinforced Al_2O_3 ceramic featuring improved toughness and unique friction-reducing coating
- For machining nickel- and cobalt-based super alloys and other difficult-to-machine materials
- Exceptional tool life with metal-removal rates up to ten times greater than carbide

XSYTIN®-1

- Phase-toughened ceramic capable of extreme feed rates
- Ideal for use in interrupted cuts, scale and milling
- For machining rough forgings and castings of high-strength alloy materials

GSN100™

- Unique hot-pressed silicon nitride ceramic for machining cast irons
- Superior wear and toughness for turning and milling applications
- Available in all standard geometries and engineered specials

GEM-8™

- $Al_2O_3 + TiC$ composite ceramic for hard alloy turning
- For machining roll materials, gray and nodular cast irons, and hardened steel
- High strength and hardness provide exceptional tool life with a high degree of predictability

GEM-19™

- Offers high abrasion wear resistance and moderate strength
- For use in areas where interruptions, impact or high hardness are not factors

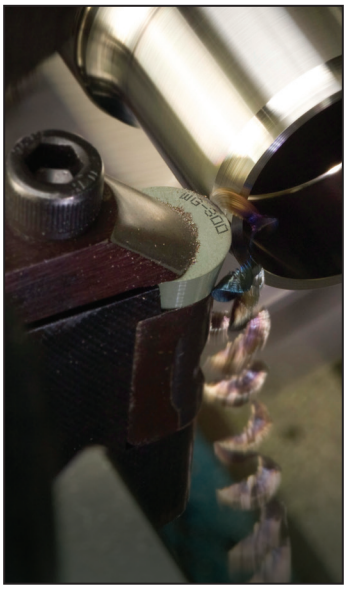

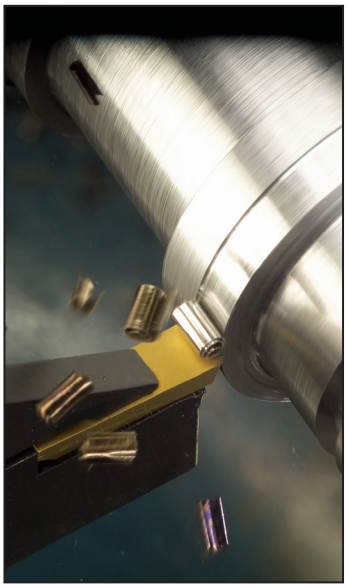

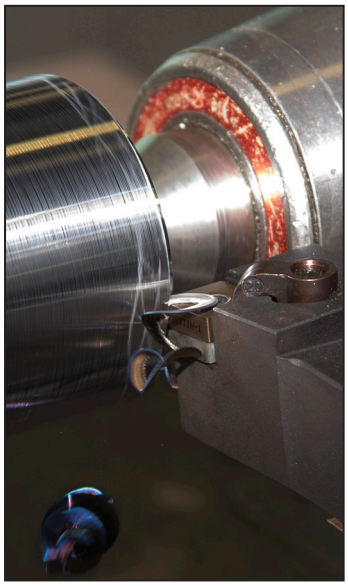

Carbide Inserts

Greenleaf offers a comprehensive line of carbide inserts ranging from sub-micron C-1 through C-8 classifications.
Carbide inserts are available in ANSI standard geometries with multi-purpose chipbreakers for heavy roughing through finishing.

CVD Coated

G-5135
- MT-CVD coated grade ideal for use in rough steel turning operations and select steel milling applications
- Also applicable in the roughing of cast irons and stainless steels
- Apply at moderate speeds and high feed rates

GA5023
- High-performance MT-CVD coated grade for turning and milling various grades of cast iron
- Application ranges from roughing to finishing on most cast iron materials
- High wear resistance and toughness enables high speed machining at a wide range of feed rates

GA5036
- High-speed MT-CVD coated grade for milling forged and cast steels and selected ductile irons
- Toughness and heat resistances make it suitable for heavy and light duty milling at high cutting speeds

GA5125
- High-performance MT-CVD coated grade used primarily for the milling and turning of manganese steel
- Also applicable in the machining of chrome-moly steels, tool steels, and similar high-alloy steels in clean and interrupted turning operations
- Excellent resistance to abrasion, crater wear, thermal shock, deformation, and edge build-up

GA5035
- High-performance MT-CVD coated grade for turning all types of steels
- Ideal for heavy roughing to finish turning applications requiring resistance to heat deformation, thermal shock from interrupted cuts, and abrasion
- Best applied at high speeds and a moderate range of feeds

GA5025
- High-speed MT-CVD coated grade developed primarily for turning operations
- Excels in light roughing and finishing applications of carbon and alloy steels, including select stainless steels
- Preferred when tool life and wear resistance are essential in steel machining

G5125+
- Tough Cobalt-enriched, CVD-coated grade suited for roughing and semi-finishing of steels in turning applications
- Best applied in clean, continuous cuts and heavily interrupted cuts of various types of steel
- Primary applications range from soft steels to hardened steels at medium to high speeds and moderate feed rates

GA5026
- High-performance MT-CVD coated grade developed for finish turning in nickel- and cobalt-based super alloys, stainless steels, hardened steels, and refractory metals
- Outstanding wear resistance while maintaining exceptional resistance to notching and deformation common to machining high-strength materials
- Best applied at high speeds and low feed rates

PVD Coated

G-915
- Multi-layer PVD-coated grade excellent for milling and turning heat-resistant alloys, stainless steels, and low carbon steels
- Best applied at moderate speeds and moderate to high feeds in milling and interrupted turning applications
- Great choice for general machining in a variety of materials and applications

G-9120
- Multi-layer PVD-coated grade that excels at milling and turning of steel castings and forgings
- Engineered to maximize productivity at moderate to heavy feed rates and high depths of cut, making it ideal for heavy turning applications in steel

G-9230
- PVD-coated grade designed for milling heat-resistant alloys, titanium, and hardened & stainless steels
- Well-suited to turning stainless steel, interrupted turning of HRSAs, and interrupted titanium turning
- Superior wear resistance and toughness and is excellent for cast and forged scale machining conditions

G-925
- High-performance multi-layered PVD-coated grade designed for machining abrasive and difficult-to-machine materials
- Applications include heat-resistant super alloys, titanium & other refractory metals, stainless steels, and many cast irons
- Excellent resistance to notching and deformation at moderate to high speeds and moderate feeds

• G-9610
- PVD-coated grade designed for turning titanium-based alloys at higher speeds and moderate feed rates
- Highly resistant to built-up edge, chemical wear, abrasive wear, and loss of hardness at high temperatures
- Retains a sharp edge longer, relieving cutting forces and excessive heat

Excelerator® Milling Cutters

Versatile cutters designed to accept carbide or ceramic inserts

Ball Nose

SIZE RANGE: 3/8" - 1" (10mm - 25mm)

Our ball nose end mills are the only ball nose cutters designed to use ceramic and carbide inserts in the same qualified cutter bodies. Combined with our G-925 carbide and WG-600® and XSYTIN®-1 ceramic inserts, the unique cutter geometry offers better performance, longer tool life and superior cutting action over competitors' mills across a wider spectrum of materials.

U.S. Patent No. 8,177,459 B2

Extreme Feed

SIZE RANGE: 1" - 12" (25mm - 315mm)

Always on the cutting edge of productivity, Greenleaf engineered the Excelerator® XF milling cutter system. The Excelerator® XF is designed for high-feed milling on a wide variety of materials including hard steels and high-temp alloys using Greenleaf's advanced ceramic and carbide inserts.

Face Mills

SIZE RANGE: 2" - 12" (50mm - 315mm)

High-velocity cutters with ceramic inserts for use in a variety of materials at high speeds and accelerated feed rates. Greenleaf cutters have been engineered to offer outstanding performance with ceramic inserts at elevated spindle speeds on the most demanding materials. Precision nests provide multiple insert configurations and body protection. These face mills are available in coarse and fine pitch designs.

End Mills

SIZE RANGE: 3/8" - 2-1/2" (10mm - 63mm)

High-velocity cutters with ceramic inserts for use in a variety of materials at high speeds and accelerated feed rates. Greenleaf's end mills are designed for high-performance milling in difficult to machine materials. Utilizes indexable inserts and offers secure insert clamping at high RPMs. These end mills are available in coarse and fine pitch designs.

Standard Milling Cutters

High-performance milling cutter systems for virtually any application

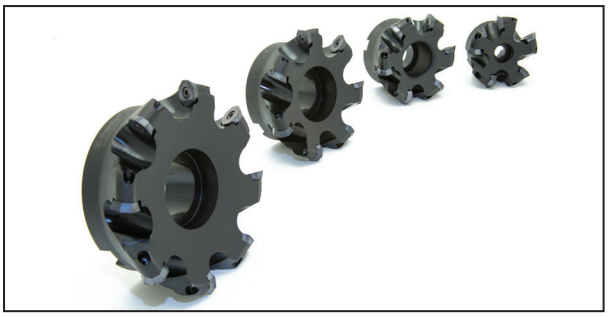

Index-O-Cut™

The Index-O-Cut™ is a high-performance milling system for all materials thanks to its high shear cutting action and the 45° lead angle on the octagon-style insert. These mills are designed to run at higher speeds and feeds than the competition with low horsepower consumption.

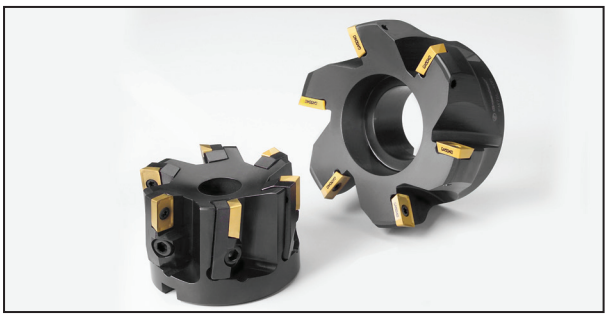

Hushcut®

Series II Screw-On Insert Cutters

Quiet and free-cutting mills. The screw-on insert design makes the most of available horsepower and improves tool life. Provides excellent finish and utilizes all four insert corners.

Powermill® Cutters

Ideal for heavy-duty cutting in severe interruptions and uneven surfaces. Replaceable components maximize cutter life while providing deep depths of cut. The face mills are available with standard and sinusoidal inserts.

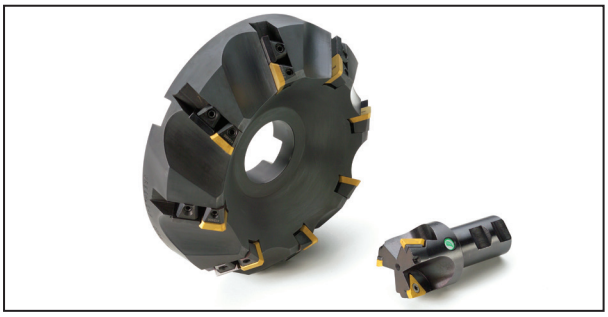

High Shear Cutters

Produce excellent surface finish and material removal rates on a variety of materials. End mills offer a protected screw-on insert pocket design.

Slotting Cutters

Standard screw-on and mechanically held indexable slotting cutters.

- Powerslot® II – adjustable-width slotter
- Narrow-width slotter

Turning & Boring

Industry-standard turning and boring tools engineered for maximum productivity and tool life

- For heavy roughing to finishing operations
- ANSI/ISO qualified
- Available in a selection specially designed to optimize the use of ceramic inserts
- Available in a wide variety of styles for all common insert geometries

Toolholders

Greenleaf manufactures a complete line of industry standard toolholders in conformance with ANSI specifications for carbide inserts. Toolholder systems for use with ceramic inserts are based upon industry standard hardware; however, geometry and pocket depth are designed to maximize ceramic performance.

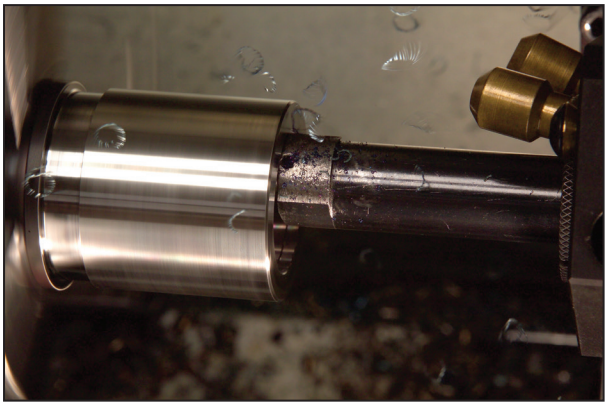

Boring Bars

Greenleaf's boring bar systems and cartridges are designed around industry standard hardware. This gives complete interchangeability with other tooling components and minimizes spare parts. Greenleaf can supply heavy metal or "No Chat" high-density tungsten alloy bars that can reduce, and sometimes eliminate chatter for those applications that require a longer reach.

Quick-Change Toolholders

The Greenleaf quick-change toolholders conform to ISO 26623, utilize standard components, and are designed to maximize tool life in carbide and ceramic turning applications.

Grooving, Profiling & Cut-Off

Offering up to 248 available support blade and shank combinations

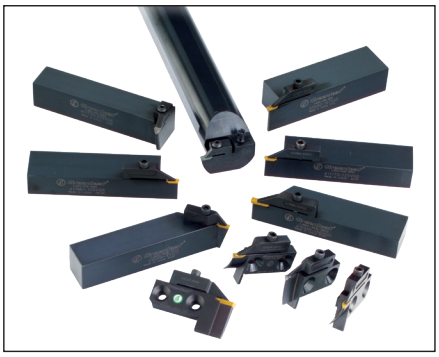

Complete System

Greenleaf's toolholder system for grooving, profiling and cut-off applications is designed to accept carbide or ceramic inserts.

The system features a "V"-bottom pocket design for superior insert stability and precision cutting. An interchangeable support blade system includes stocked industry-standard, quick-change shanks.

Solid End Mills

High-performance carbide and ceramic end mills with unique flute geometry to maximize productivity

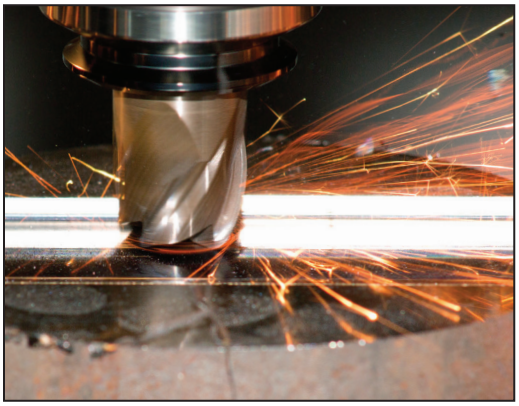

XSYTIN®-360

XSYTIN®-360 ceramic end mills combine Greenleaf's phase-toughened XSYTIN®-1 substrate with a unique cutting geometry that offers ten times higher productivity and tremendous cost savings. The strength of the material allows the user to apply chip loads similar to solid carbide end mills with higher speeds common to ceramic machining. These ceramic end mills provide customers with significant increases in productivity over current solid carbide or ceramic products.

Greenleaf-360

Greenleaf-360 carbide end mills offer an excellent combination of strength, toughness, and heat resistance that enables machining capabilities from roughing to finishing with extended tool life and predictability. Greenleaf-360 high-performance end mills have shown speed and feed performance 25-50% higher than the competition with extended tool life. A full line of 4, 5, and 7 flute configurations provides solutions from full slotting to high-speed machining.

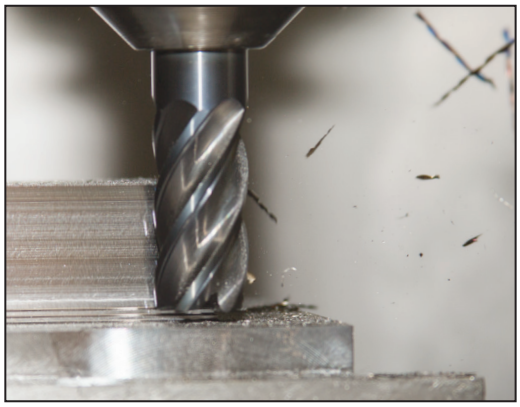

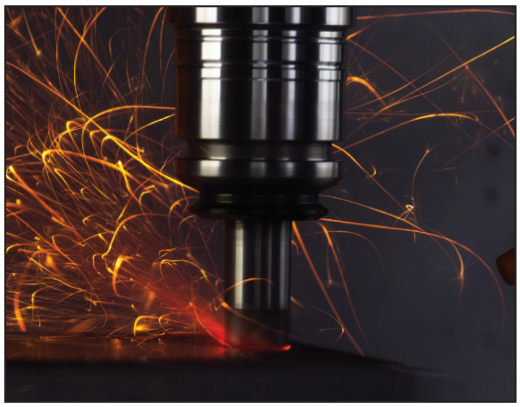

Capstone™-360

Capstone™-360, a new line of high-performance end mills featuring a ceramic tip combined with a carbide shank, offering up to 50% higher tool life compared to most commercially available solid ceramic endmills. Designed for superior performance in Heat-Resistant Super Alloys and select Cast Irons. Capstone™-360 excels in applications such as slotting, pocketing, and face milling.

Heavy Turning

Unsurpassed results from the initial heavy roughing to the final finish pass

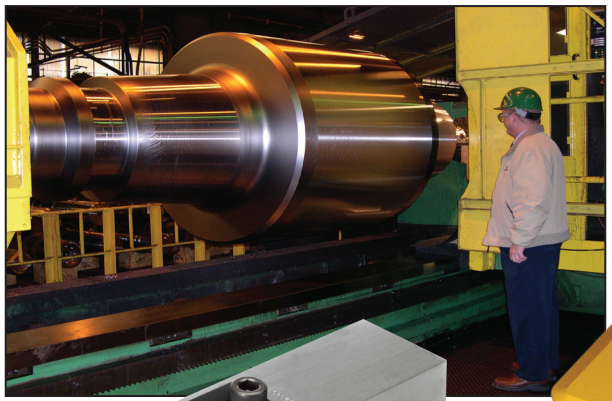

Roll Lathe Tooling

Greenleaf has extensive experience in the design and manufacture of heavy-turning tooling systems. These systems are extremely productive in heavy-turning applications with both carbide and ceramic inserts.

- Farrel quick change tooling
- 1.5″ (38 mm) shank standard tools and components for heavy duty lathes
- High-performance carbide and ceramic inserts

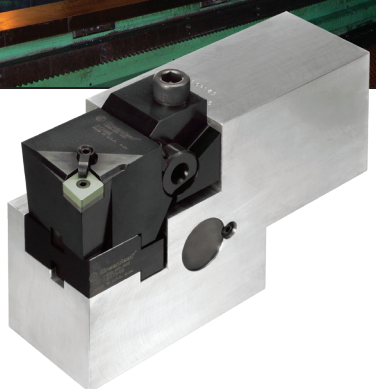

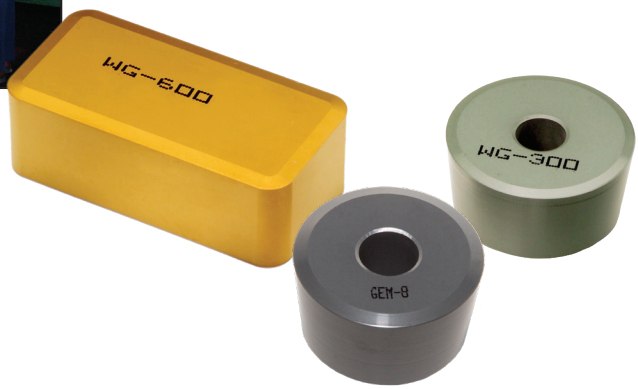

Indexable Drilling

Outstanding facing and boring performance in lathe applications

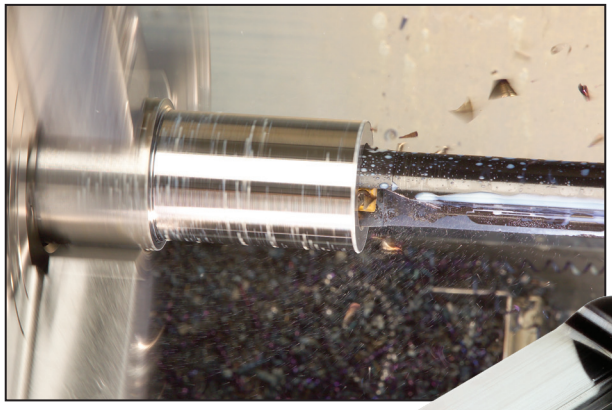

Holemill™ System

An indexable drill utilizing Greenleaf's advanced coated-carbide grades for higher speeds, quieter cutting, longer tool life and reduced horsepower consumption. Available in 0.937″–3″ (24mm - 40mm) diameters.

Tube Scarfing

A modern tube scarfing system for increased productivity

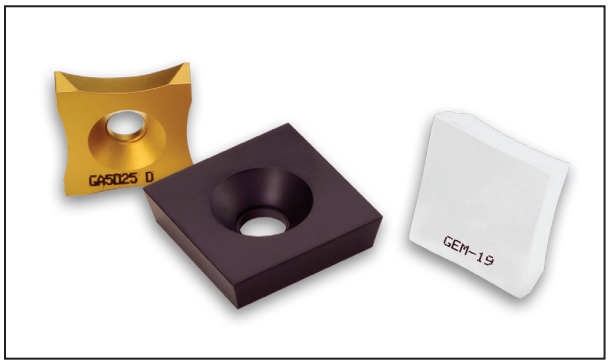

Tube scarfing systems from Greenleaf using our indexable inserts offer decreased downtime, longer tool life, faster tool change time, decreased tool costs and elimination of regrinding problems. Superior seams can be achieved since an accurate radius form is always available on each side of the insert.

GA5023

- MT-CVD coated carbide grade
- Developed for abrasive wear & shock resistance

GA5025

- MT-CVD coated carbide grade
- Superior heat resistance and long tool life

GEM-19™

- Al_2O_3 ceramic grade
- For high-speed operations
- For demanding finish requirements

Bar Peeling

Ready to meet challenges of the bar turning industry

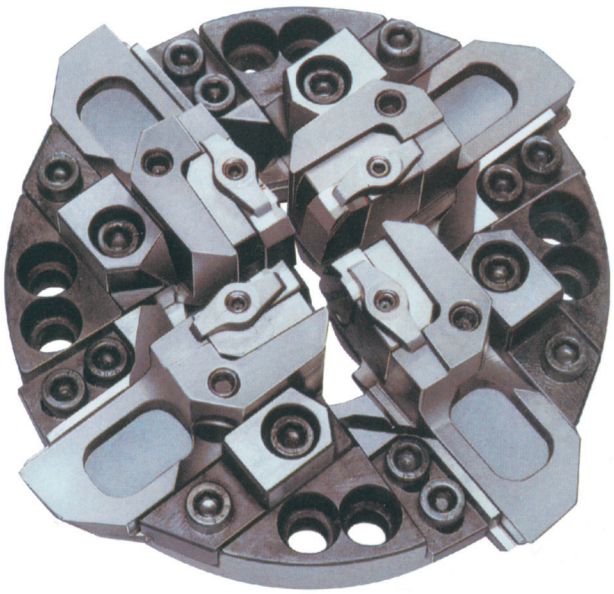

Utilizing advanced 3-D modeling and CNC manufacturing equipment, Greenleaf can provide a bar peeling solution from the machine spindle through the cutting tool insert. A complete tooling system engineered to meet your requirements.

- Daisho
- Kieserling
- Medart/Blaw Knox
- Hetran

Ring Max™ Ring-Groove Cutter

A complete ring-groove tooling solution

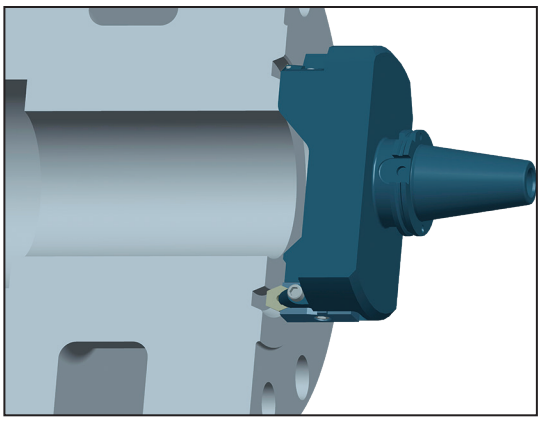

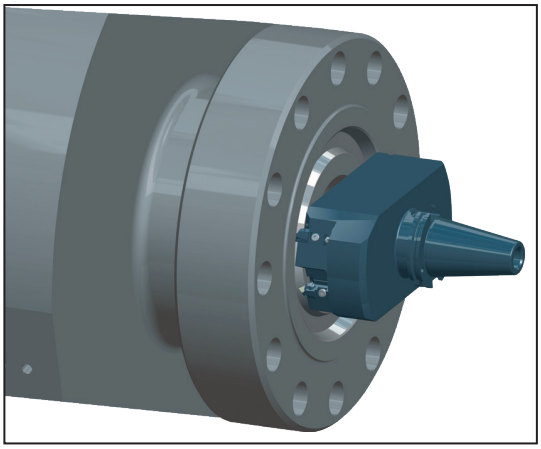

Greenleaf's Ring Max™ II is engineered for greater serviceability and now machines a wider range of standard API ring grooves! Designed specifically for the oil industry, Greenleaf's Ring Max™ II line of ring groove tooling is engineered to cut machining time of API ring grooves. Combined with our WG-300® whisker-reinforced ceramic inserts, Ring Max™ II tools can reduce cutting time from 30 minutes or more to less than one minute.

- Finishes API ring grooves in Inconel 625 clad overlay in less than one minute
- Creates industry-standard API grooves including BX, R and RX styles
- Replaceable cartridges designed for easy maintenance
- Groove and chamfers are simultaneously machined in one operation
- Also available for grooving in stainless steel and alloy steel
- Available in both pre-clad and finish cutters

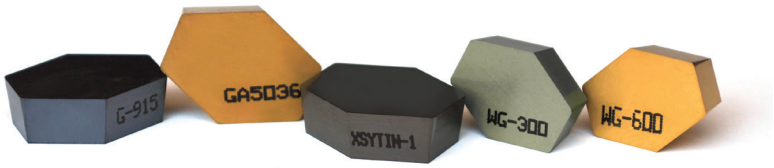

There's a Greenleaf high-performance insert grade for every ring groove need.

- **WG-300®** and **WG-600®** whisker-reinforced ceramic and **XSYTIN®-1** phase-toughened ceramic for Inconel 625 clad overlay
- Carbide grade **G-915** for stainless steel
- Carbide grade **GA5036** for alloy steel

Industry Segment Solutions

Innovative tooling and applications for industry-specific demands to maximize productivity

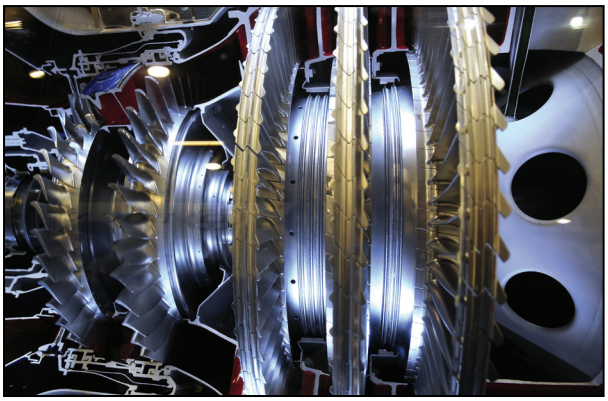

Aerospace

Greenleaf designs and manufactures tooling solutions for the unique problems common to manufacturing jet engine components. High-nickel alloys, stainless steels and titanium alloys are all part of our daily challenges.

Most of the world's commercial and military jet aircraft soar on turbine engines machined with Greenleaf's advanced cutting tools and toolholding systems.

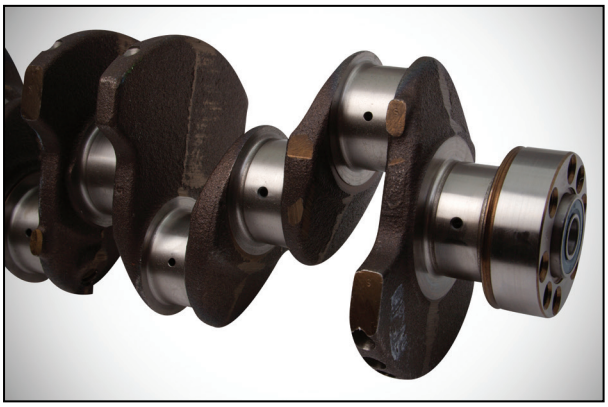

Crankshaft Milling

Greenleaf's industry-leading crankshaft milling cutters are manufactured to exacting engineering standards. Greenleaf utilizes a segmented cutter system designed to maintain precision tolerances required on heavy-duty crankshafts and camshafts. Coupled with Greenleaf's rugged, high-performance carbide grades, these cutters are the ultimate solution to machining large crankshafts.

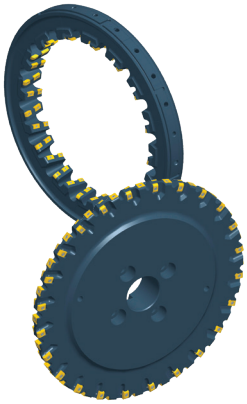

Rail Milling

The tough demands of rail, frog and switch milling are met with Greenleaf's heavy-duty rail milling cutters and inserts. Rugged cutters designed for maximum durability and productivity combined with carbide grades optimized for high manganese steel milling will provide the outstanding performance required for rail track machining operations.

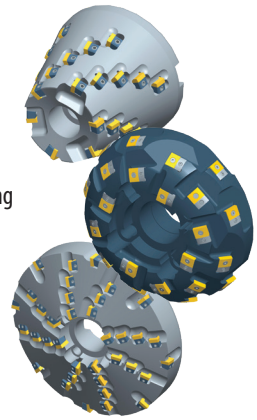

Special Tooling

Special tooling is a visible strength of the Greenleaf product line. Customers from around the world utilize the Greenleaf engineering service to address their specific and often complex requirements.

- Reduce redundant tooling
- Dramatically increase productivity
- Solve machining problems

Milling Cutters

Greenleaf Corporation offers a host of solutions for specialized milling needs. From high speed milling to complex designs for multiple geometries, Greenleaf has the solution.

Specialty Inserts

Our vast experience in the tooling industry along with cutting edge design technology allows us to design specialty inserts for maximum productivity in demanding applications.

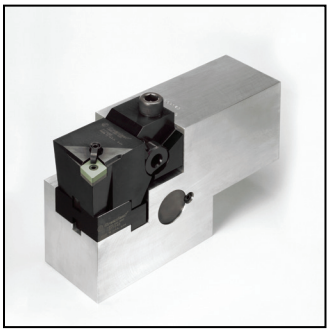

Toolholders

When standard tooling won't do, let our engineers design tooling for your specific needs.

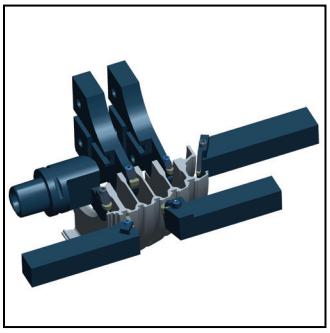
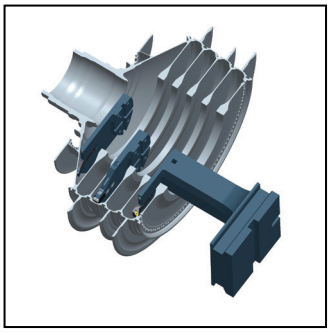

Complete Special Tooling Packages

With special engineering abilities and experience, Greenleaf can offer complete special tooling solutions customized for performance and production efficiency.

Greenleaf®
Sustainable Productivity

Greenleaf Corporation is a leading supplier of industrial cutting tools, specializing in the manufacture of high-performance tungsten carbide and ceramic grade inserts and innovative tool-holding systems. Greenleaf continues to build on nearly 80 years of innovation and the legacy established by its founder Walter J. Greenleaf, Sr., which centers on supplying customers with productive solutions to every metal-cutting situation.

Discover more at: **https://greenleafcorporation.com**

Greenleaf Corporation
18695 Greenleaf Drive
Saegertown, PA 16433 USA
800-458-1850 • 814-763-2915
sales@greenleafcorporation.com

Greenleaf Europe BV
De Steeg 2
6333 AP Schimmert
The Netherlands
+31-45-404-1774
eurooffice@greenleafcorporation.com

Greenleaf (Hunan) High-Tech Materials Co., Ltd.
Changsha, Hunan 410205, China
+86-731-89954796
info@greenleafcorporation.com.cn

MADE IN THE USA

Greenleaf Corporation is ISO 9001 Certified.

© 2024 Greenleaf Corporation